1/10遥控四驱门桥仿真攀爬车YK4107
说明书
1/10 SCALE RC ROCK CRAWLER 4WD YK4107
INSTRUCTION MANUAL

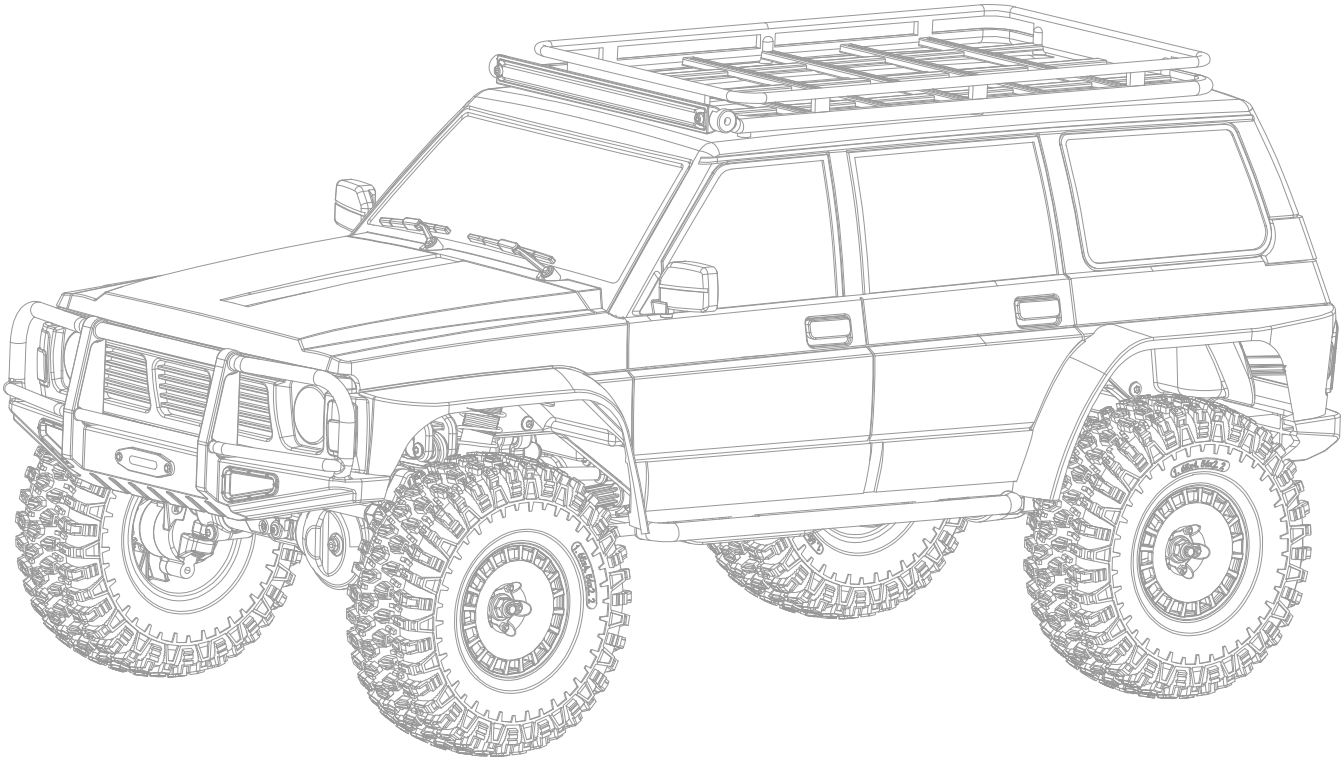

感谢您购买我们的产品！祝您玩得开心，为了获得最佳产品性能体验，请在使用前务必认真阅读说明书。

Thank you for your purchasing. Before operating this vehicle, please read manual materials thoroughly. This manual contains all the necessary set-up and operating procedures that allow you to unlock the performance.

目录 01
操作说明和注意事项 . . . . . 02～08
爆炸图 . . . . . 09～24
配件表 . . . . . 25～31

Table of Contents 01
Instructions and Precautions . . . . . 02～08
Explode Diagram . . . . . 09～24
Parts List . . . . . 25～31

安全注意事项
SAFETY PRECAUTIONS AND WARNINGS

年龄建议：不适合**14岁以下儿童。 这不是玩具。**

Age Recommendation: Not for children under 14 years. This is not a toy.

1) 严禁在公共场所或拥挤的地方操作模型车, 本产品不允许儿童在没有成人直接监督下使用。
Never operate the model in public places and the street or in populated areas for any reason. This product is not intended for use by children without direct adult supervision.

2) 严禁反接电池或拆解电池，这是危险的，并可能引起火灾。
Never reverse install the battery or disassemble the battery, which is dangerous and may cause a fire.

3) 本产品包含细小且锋利的零件，请将任何化学品、小零件和电子设备放在儿童接触不到的地方。
This product contains small and sharp parts, keep all chemicals, small parts and anything electrical out of the reach of children .

4) 当不使用模型车时，请先断开电源并把电池从车身移出。此外遥控器电源关闭后，应取出电池以免漏液。
When not use the vehicle, power OFF the vehicle and then the transmitter. Unplug the battery and remove it from the vehicle. Also remove the transmitter battery to avoid leakage.

5) 请不要混用新旧或不同类型电池。
Please do not mix old and new batteries or different types of batteries.

6) 不要在遥控器电池电量低的情况下操作车子，如果电池电量过低，请更换电池。
Never operate your model with low transmitter batteries. Replace batteries when vehicle batteries are low.

7) 在开机状态下，切勿拆卸遥控器电池。
Never remove the transmitter batteries while the model is powered ON.

8) 请根据当地有关规定，妥善弃置或回收电池。
Dispose of used batteries according to national regulations.

9) 充电时，请从模型车中取出电池，如果电池变形，请不要使用。
When charging the battery, please take out the battery from the vehicle. If the battery is deformed, please do not use it.

10) 电池应在成人监督下充电，无人看管时请勿给电池充电。
The battery should be charged under adult supervision, do not charge the battery when unattended.

11) 遥控系统有各种不同功能和设置，初次接触前请确保对所有功能设置完全理解，未能正确操作可能导致产品损坏。
The radio system has different functions and settings, please read the entire manual to gain a full understanding of functions, failure to operate correctly could result in product malfunction and damage.

产品规格参数
PRODUCT SPECIFICATION:

车长Length:	521mm
车宽Width:	247mm
车高Height :	267mm
轮胎Tire Diameter/Width:	116/42mm
轴距Wheelbase:	325mm
车重 Product Weight:	3.1KG
电池仓尺寸Battery Box Size:	156*48mm
接近角Approach:	58°
离去角Departure:	52°
转向角度Steeringangle:	40°
离地间隙Ground clearance:	50mm

马达齿 Pinion Gear	低速齿轮比 Low speed Gear Ratio	高速齿轮比 Low speed Gear Ratio
12T	81.95	35.20
13T	75.70	32.50
14T	70.30	30.20
15T	65.60	28.20

遥控器功能介绍
TRANSMITTER FUNCTIONS

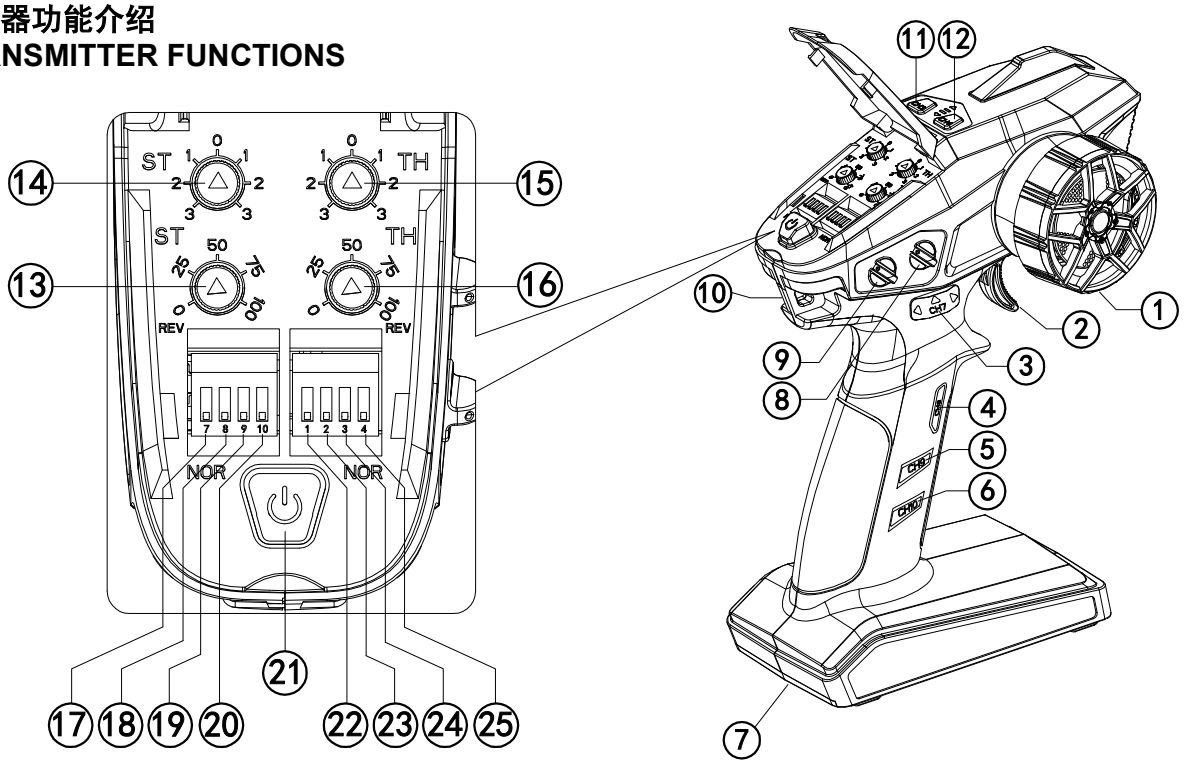

1. 转向轮:左转向灯/右转向灯（CH1）
   Steering Wheel:Turn Signal light Left/Right
2. 油门/刹车扳手：刹车灯/倒车灯（CH2）
   Throttle/Brake Trigger:Brake Light
3. 灯控开关（CH3）
   Lighting Control Button（CH3）
4. 高低速换挡开关（CH8）
   Hi/Low Speed Conversion
5. 坦克掉头模式开关（CH9）
   Button for Rear Inner Wheel Lock Mode
6. 第10通道旋钮（CH10）
   CH10 knob
7. 电池仓
   Battery Compartment
8. 第6通道旋钮（CH6）
   CH6 knob
9. 第5通道拖刹设置（拖刹力度旋钮可调）
   CH 5 Drag Brake Force Setting (Adjust Drag Brake Force Knob)
10. 挂绳孔 (Lanyard Hole)
11. 前差速锁开关（CH3）
    Front Differential Lock/Unlock Button(CH3）
12. 后差速锁开关（CH4）
    Rear Differential Lock/Unlock Button（CH4）
13. 方向通道比率调节旋钮(ST.D/R)
14. 方向通道微调旋钮(ST.TRIM)
15. 油门通道微调旋钮(TH.TRIM)
16. 油门通道比率调节旋钮(TH.D/R)
17. CH7反向设置开关
    CH7 Reverse Switch
18. CH8反向设置开关
    CH8 Reverse Switch
19. CH9反向设置开关
    CH9 Reverse Switch
20. CH10反向设置开关
    CH10 Reverse Switch
21. 电源开关(OFF/ON)
22. CH1反向设置开关
    CH1 Reverse Switch
23. CH2反向设置开关
    CH2 Reverse Switch
24. CH3反向设置开关
    CH3 Reverse Switch
25. CH4反向设置开关
    CH4 Reverse Switch

遥控器电池安装
INSTALLING THE TRANSMITTER BATTERIES

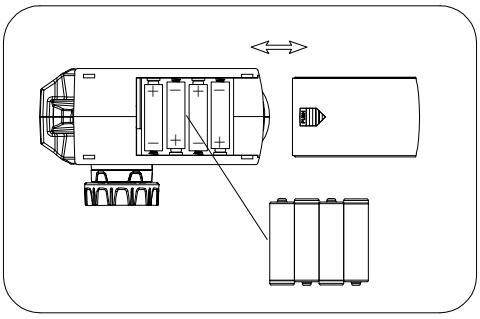

1) 按箭头方向滑动，拆下或者安装发射机电池盖。
   Remove the battery cover from the transmitter (Slide cover as shown arrow direction)
2) 装4颗电量充足的AA电池，注意电池尺寸正负极如图所示意，不要装反。
   Install 4 AA batteries with sufficient power as shown. Taking care to align the battery polarity.
3) 不要混用新旧或不同类型的电池. 更换电池型号不正确，或给非充电电池充电有爆炸危险。
   Never use different batteries or mixed old and new batteries. Risk of explosion if battery is replaced by an incorrect type or chargingnon-rechargeable batteries.
4) 定期检查遥控器上电池电量。电池电量不足情况下，不能操作车子，信号会遭受影响，车子可能瞬间失控，导致发生碰撞或伤害。长时间不使用时，请将电池从遥控器内取出。
   Check the transmitter battery level regularly. Never operate your model with low transmitter batteries, the radio signal may subject to interference and cause momentary loss of control and collisions or injury.
   When not in use for a long time, please remove the battery from the transmitter.

电调设置说明
ESC Instructions

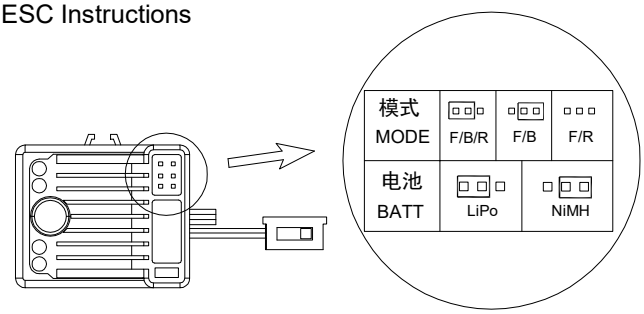

F/B/R: 前进/刹车/后退模式
F/B/R: Forward/Brake/Reverse
F/B: 前进/刹车模式
F/B: Forward/Brake
F/R: 前进/后退模式(攀爬模式)
F/R: Forward/Reverse(Crawler mode)

如图所示，电调跳线帽插入不同的位置，调整电调的模式和电池的类型，每次插好后需关掉电调重启生效.

As the image shown, Jumper locations : to change the ESC mode and Battery(LiPo or NIMH). Kindly note restart the ESC to save the setting

电子设备的连接
ELECTRONICS CONNECTION

出厂前所有电子设备均已连接好
第1通道连接15KG舵机控制转向
第2通道连接电调控制动力马达工作
第3通道连接17G舵机控制前桥差速锁
第4通道连接17G舵机控制后桥差速锁
第5通道连接17G舵机控制高低速换挡
第6通道连接25KG舵机控制坦克调头
注意电池，马达的连接，黑色负极，红色正级.

Before leaving the factory, all electronic devices are pre-connected:
Channel 1: 15KG servo motor for steering control.
Channel 2: ESC for power motor operation control.
Channel 3: 17G servo motor for front axle differential lock control.
Channel 4: 17G servo motor for rear axle differential lock control.
Channel 5: 17G servo motor for high-low speed shifting control.
Channel 6: 25KG servo motor for tank pivot mode control.
Note the battery and motor connections, with black indicating negative and red indicating positive.

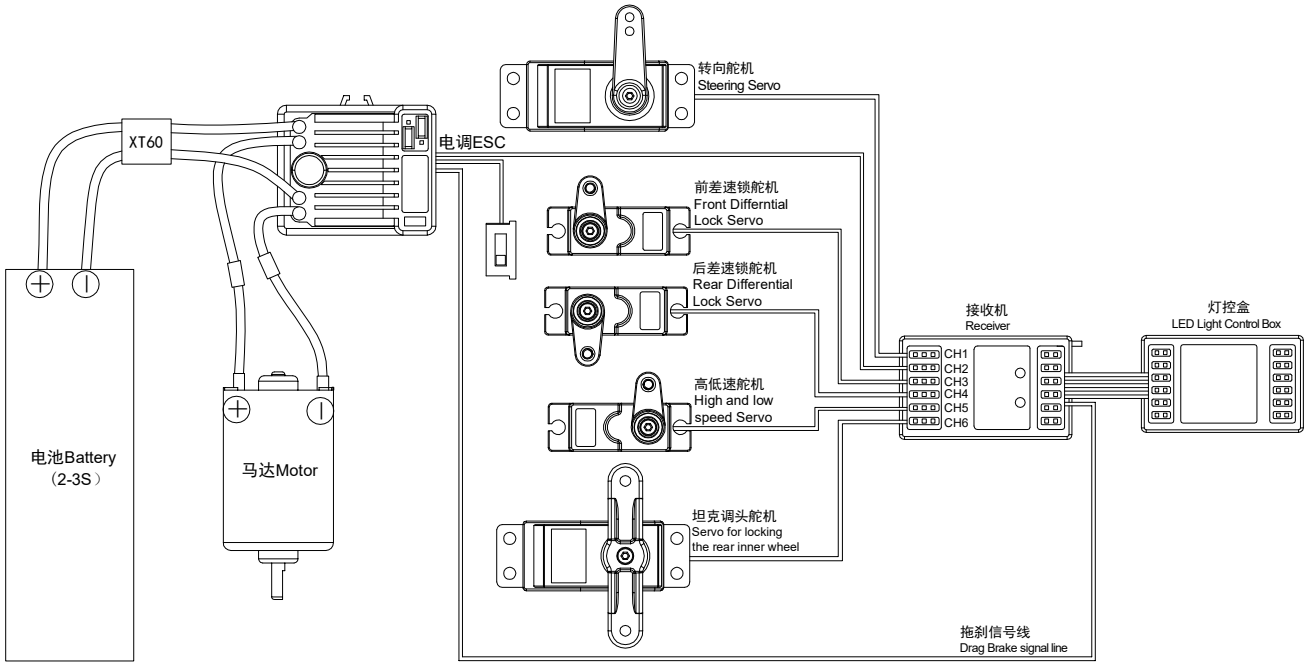

车灯的连接
LED LIGHTS CONNECTION

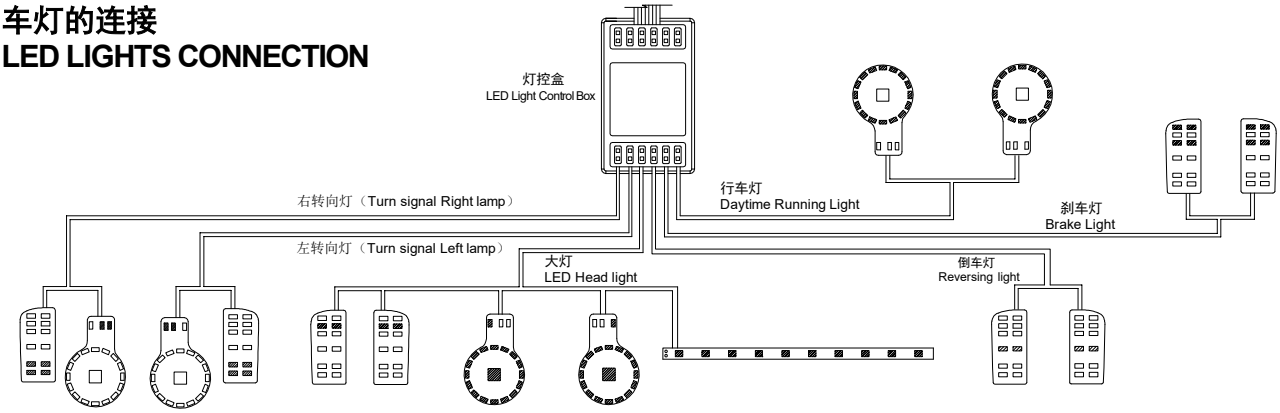

操作说明
Instructions

从车底前杠中间位置，逆时针拧开旋钮
Turm the knob counterlockwise at the middle postion fo front bumpe

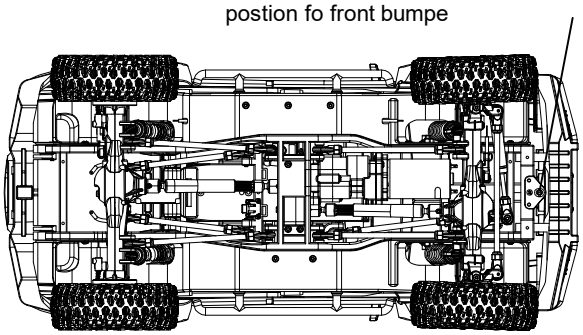

从车头两边伸入手指, 稍用力往上翻开车壳
Step into the fingers from both sides of the car and turn the car shell up slightly

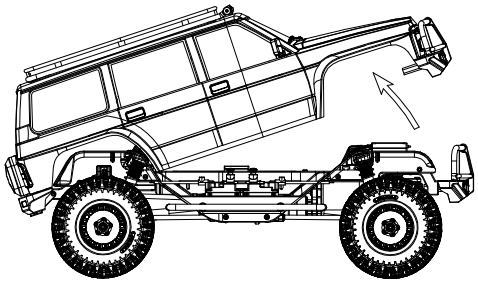

1. 向后上翻开车壳后.
   After turning the bodyshell back.
2. 将充满电的电池装入电池盒，拉紧电池绑带.
   Install fully charged battery in the battery box, then tighten battery strap .
3. 确保电调关闭，插入连接好电池线和电调线.
   Make sure the ESC is off, plug in the battery cable and the ESC cable.
4. 打开电调开关，盖好车壳，准备遥控器设置.
   Turn on the ESC, cover thebodyshell, and prepare the Transmitter systerm settings.

操作模型车
DRIVING PRECAUTIONS

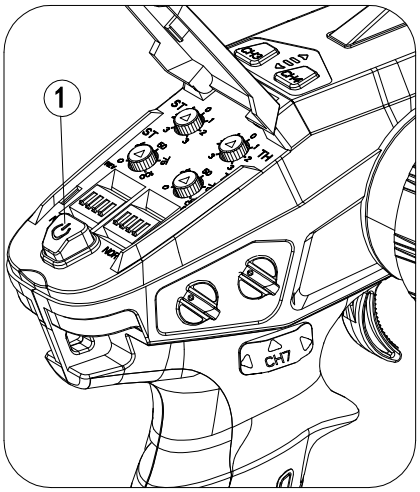

1. 打开遥控器电源开关，遥控器电源指示灯点亮。
   Power ON the transmitter, the battery Indicator lights.
2. 打开电调电源开关，电调指示灯点亮，控制系统进入工作状态。
   Turn on ESC Power Switch, the LED Lights, indicating control system enters working status.

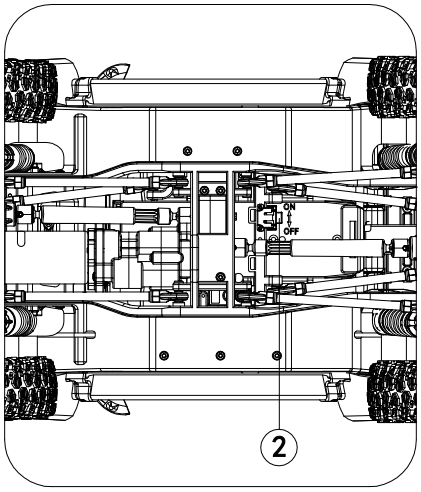

操作模型车
DRIVING PRECAUTIONS

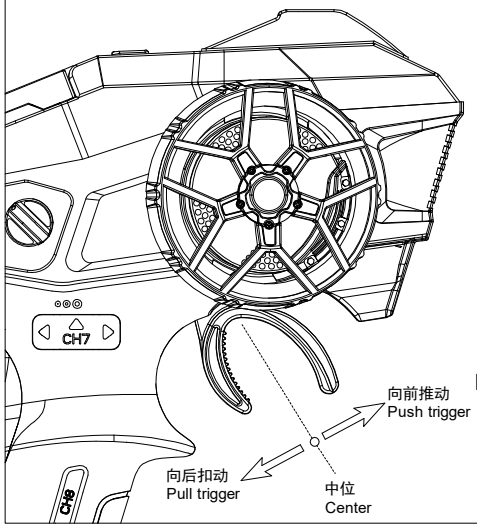

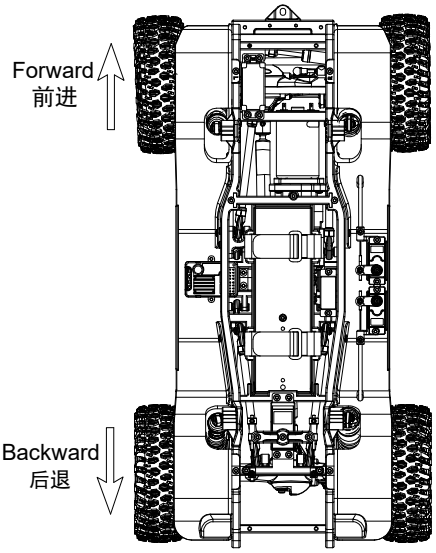

用手指向后扣动遥控器扳机，车将向前行驶。用手指向前推动扳机一次为刹车，松开手指待扳机回到中位后再向前推动则为倒车。

To move the vehicle forward, pull the Throttle trigger .
To reverse the vehicle, push the transmitter trigger one time is brake, pause, then return the trigger to center. Push again is Reverse.

操作模型车
DRIVING PRECAUTIONS

车前轮的运动是随遥控器转向轮的调整而改变的。
遥控器转向轮向左转，车前轮也是左转。
遥控器转向轮向右转，车前轮也是右转。

The front wheel movement is controlled by transmitter steering wheel.
Turn transmitter steering wheel left, the vehicle front wheels turns left.
Turn transmitter steering wheel right, the vehicle front wheels turns right.

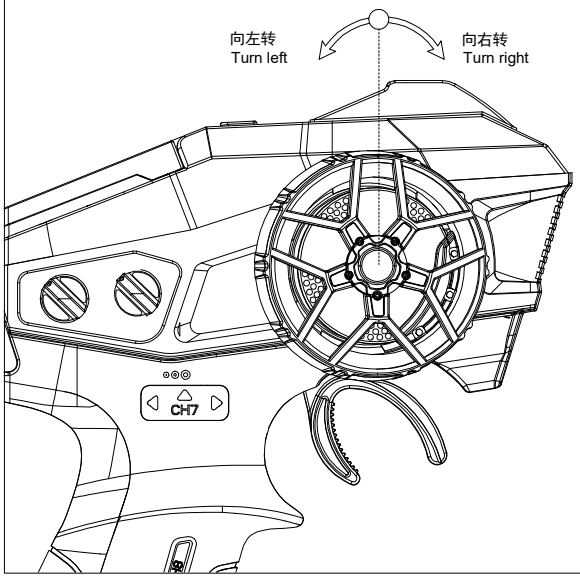

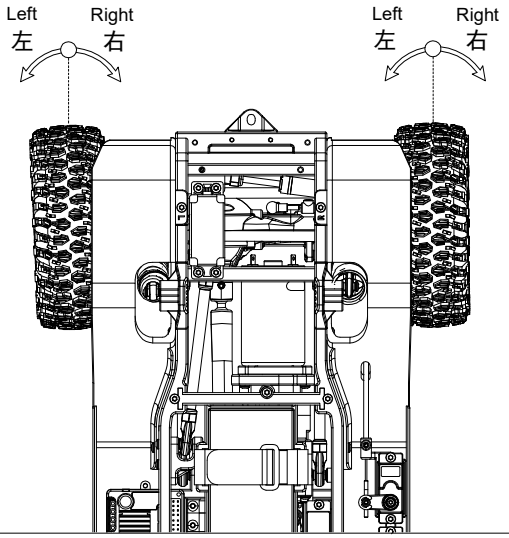

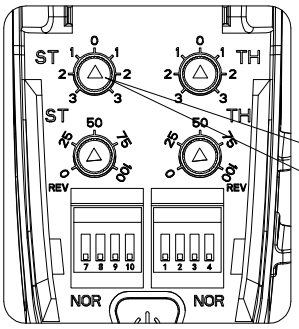

方向中位微调
Steering trim

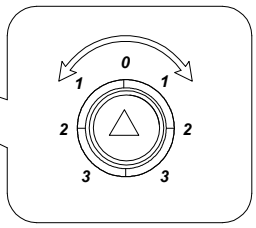

在没有操控转向轮的情况下，车辆前轮应该处于中心位置。
如果前轮偏向左侧，请顺时针转动方向微调旋钮进行微调。
如果前轮偏向右侧，请逆时针转动方向微调旋钮进行微调。

Without turning transmitter steering, the vehicle front wheels should maintain a straight line. If not, adjust ST Trim knob until the vehicle tracks straight. If the front wheel is tilted to the left, fine tuning ST Trim knob clockwise. If the front wheel is tilted to the right, fine tuning ST Trim knob counterclockwise.

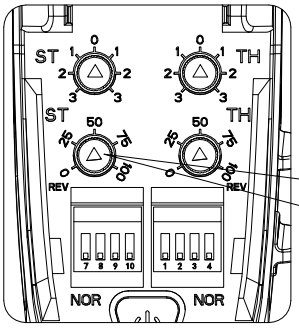

方向角度舵量调整旋钮
Steering End Point Adjustment

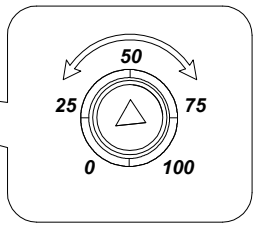

调整方向角度舵量大小，来适应不同弯角路面的行使需要。
顺时针转动该微调旋钮，可以将方向角度调整到最大。
逆时针转动该微调旋钮，可以将方向角度调整到最小。

Adjust Steering End Point to help adapt to different terrains.
Clockwise twist this knob: adjust to the maximum steering angles.
Counterclockwise twist this knob: adjust to the minimum steering angles.

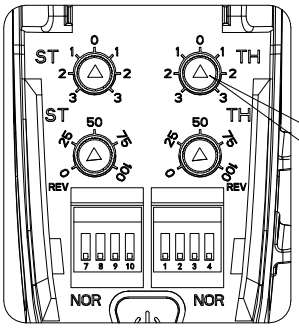

油门中位微调
Throttle Trim

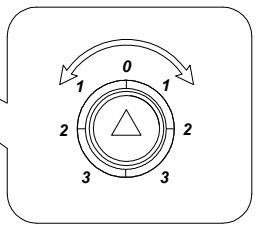

在没有操控油门扳机的情况下，车辆应该处于静止状态。
如果车子自行前进，请逆时针转动油门中位微调旋钮进行微调。
如果车子自行后退，请顺时针转动油门中位微调旋钮进行微调。

Without operting throttle trigger, the vehicle should be motionless.
If vehicle moves forward, counterclockwise adjust Throttle Trim knob.
If vehicle moves backward, clockwise adjust Throttle Trim knob.

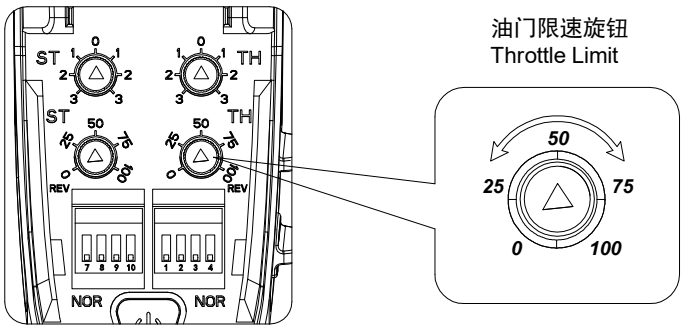

油门限速旋钮
Throttle Limit

设定遥控油门限速旋钮控制量大小，逆时针旋转是降低控制量（最低可以降到0%），顺时针旋转是加大控制量（最高值为100%正常油门控制量）。

对于初学者而言，可以先尝试调低油门控制量来适应车辆。

Set Throttle Limit knob to limits throttle output.
Counterclockwise Throttle Limit knob to reduce the limit output(minimum 0%)
Clockwise adjust Throttle Limit knob to increase the limit output(maximum 100% is for normal)
Suggest the less experienced select Throttle Limit to reduce speed.

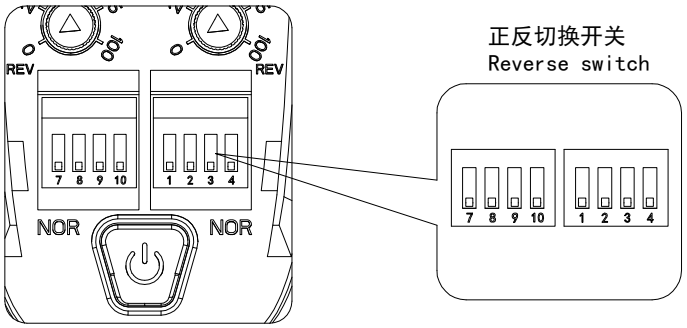

正反切换开关
Reverse switch

如果遥控的操作与车辆动作不一致，请调整此正反切换开关，直至遥控操作和车辆动作一致。

If the operation on transmitter is inconsistent with the vehicle actual performs (forward/backward, left/right) , please adjust this switch to correct.

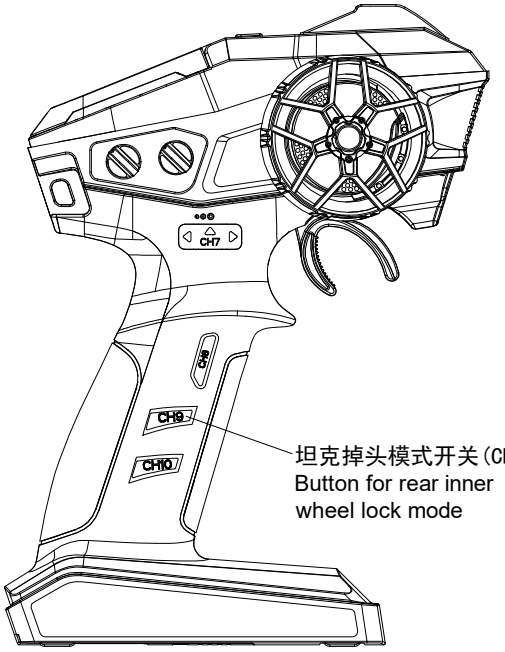

坦克掉头模式开关(CH9)
Button for rear inner wheel lock mode

按下CH9通道按键，指示灯点亮，系统进入坦克掉头模式，此时如果后差速器是锁止状态,控制系统会强制解除后差速锁,此时打方向左转，左后轮会同步完成刹车；打方向右转，右后轮会同步完成刹车。此时就可以在小空间、小角度、小距离内实现调头或转弯，在低抓地力路面高速行驶可以实现原地掉头。

Pressing the CH9 button on the transmitter, blue LED illuminates, accompanied by a brief, intermittent two-tone sound from the buzzer, indicating that the system is in the rear inner wheel lock mode. If the rear differential is currently locked, the system automatically keeps the rear differential unlock.When steering left, the left rear wheel simultaneously is locked/braked; similarly,
when steering right, the right rear wheel simultaneously is locked/braked. This feature facilitates precise vehicle turning in narrow spaces, within small circles, and over short distances. Additionally, it allows for executing sharp turns at high speeds on low-grip roads.

后轮刹车机构
Rear wheel brakemechanism

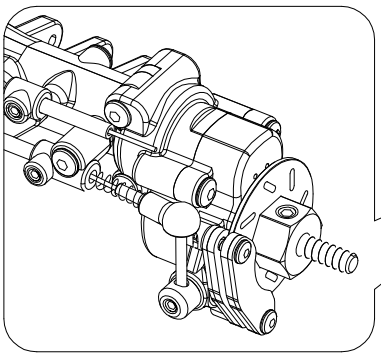

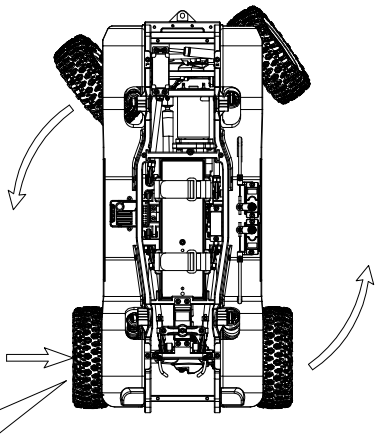

坦克掉头模式下，左转时左后轮同步进入刹车状态
In this mode, the rear left wheel is locked/braked when turn left

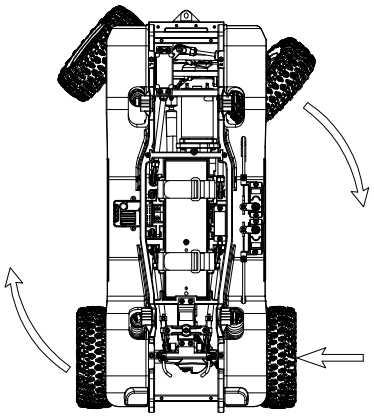

坦克掉头模式下，右转时右后轮同步进入刹车状态
In this mode, the rear right wheel is locked/braked when turn right

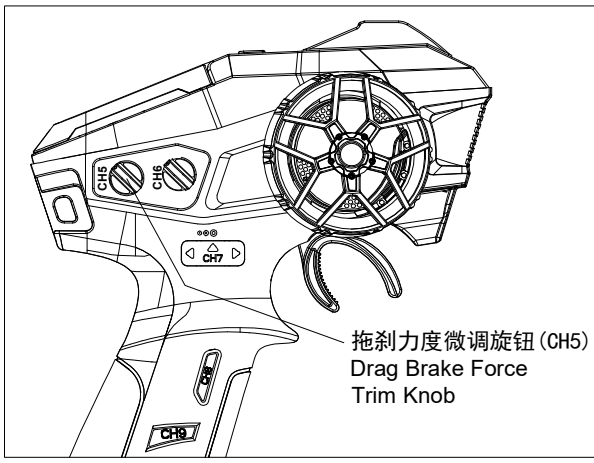

该旋钮用于设置拖刹力度，顺时针调节拖刹力度增大，逆时针调节拖刹力度减小，调整范围0-100%（攀爬模式下可设置拖刹力度）

This knob is to adjust the amount of brake force.
Turning the knob clockwise increases the drag brake force, while turning it counterclockwise decreases the drag brake force. Adjustment range is from 0 to 100%.（Drag brake force can be set in climbing mode)

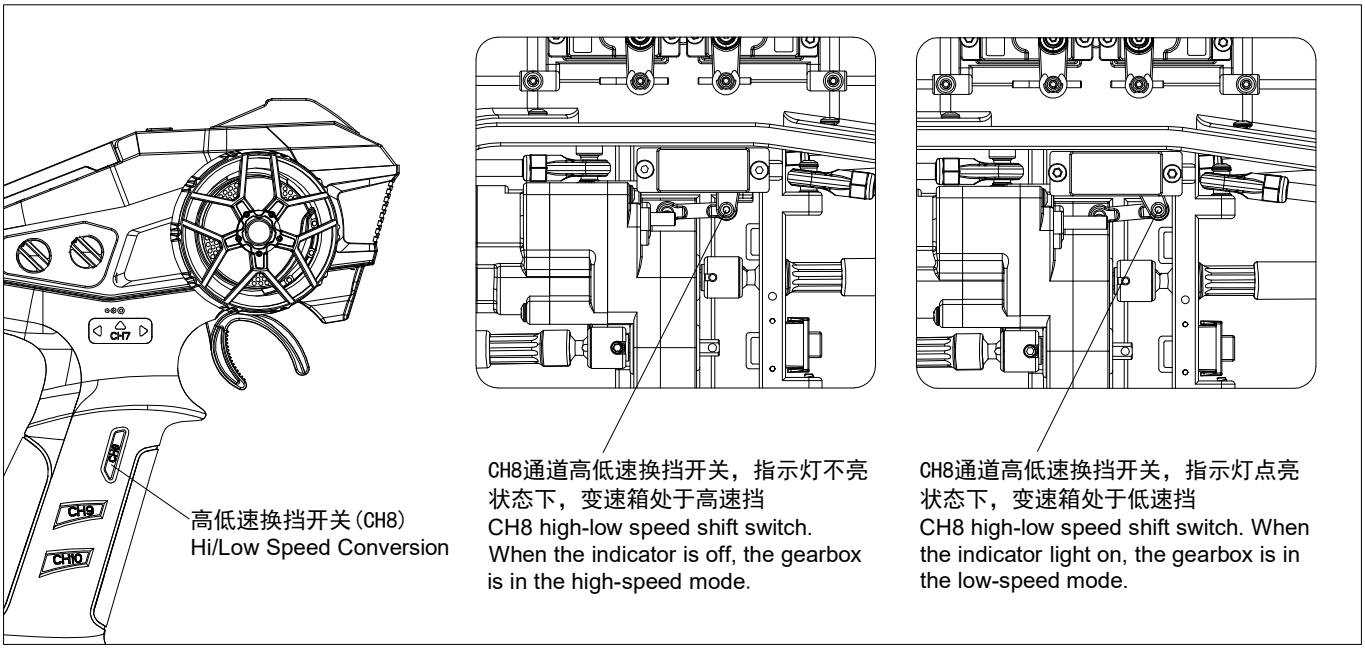

CH8通道高低速换挡开关，指示灯不亮状态下，变速箱处于高速挡
CH8 high-low speed shift switch. When the indicator is off, the gearbox is in the high-speed mode.

CH8通道高低速换挡开关，指示灯点亮状态下，变速箱处于低速挡
CH8 high-low speed shift switch. When the indicator light on, the gearbox is in the low-speed mode.

维修服务
REPAIR SERVICE:

1) 车辆需要经常保养，以保持其性能，特别是活动的零件部位，每次跑车完及时清除上面的尘土杂物。保持车辆清洁和良好的保养。
Periodic maintenance in order to ensure the vehicle best performance, especially the running parts. Remove chassis free of dirt and debris after every driving. Keep your vehicle clean and well maintained.
2) 定期检查车上有螺丝的地方，有必要就拧紧加固。
Regularly check the screws on the car and tighten them if necessary.
3) 经常检查车上面磨损/弯曲/坏掉的部件，有必要就换掉。
Always check for wear/broken/bent parts, and replace it if necessary.
4) 所有的零件都可以作为散件在爆炸图上找到编号，有损坏可以在零售商订购更换。有任何问题，都可以在零售商寻求帮助。
All parts listed on the exploded view. Damages can be ordered at the retailer. If you have any questions, you can ask for help at the retailer.

Differential Gear Assembly
差速器组 前/后

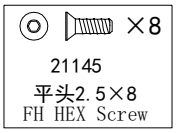

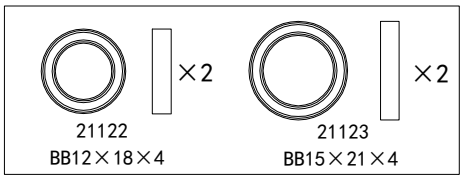

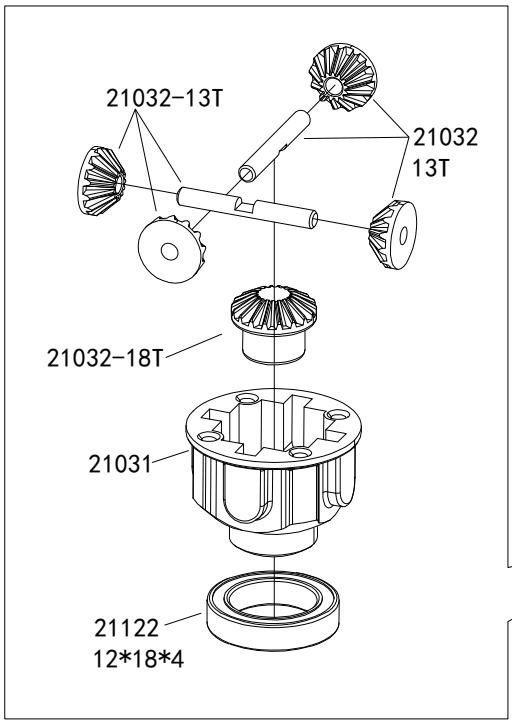

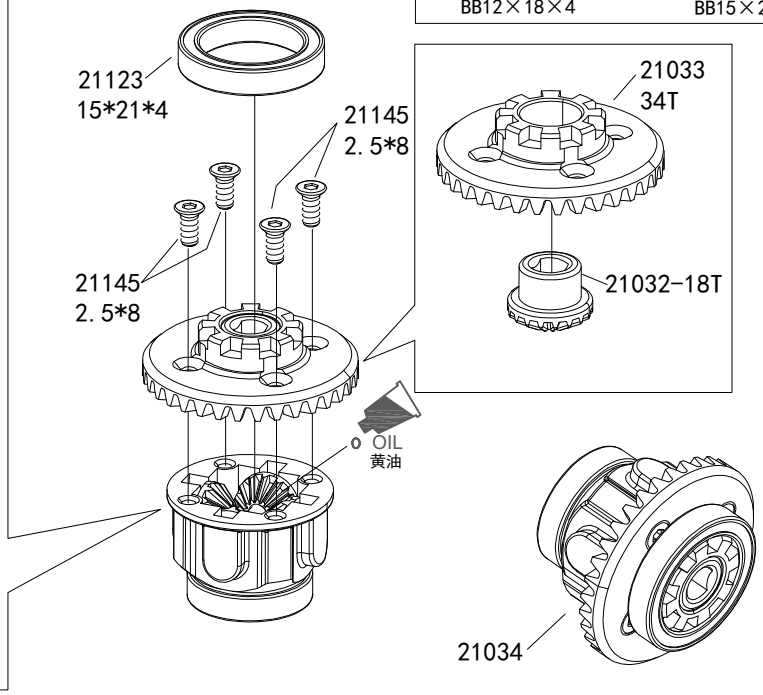

Spindle set
转向臂组 左/右

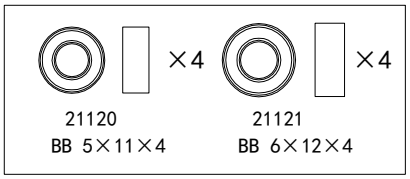

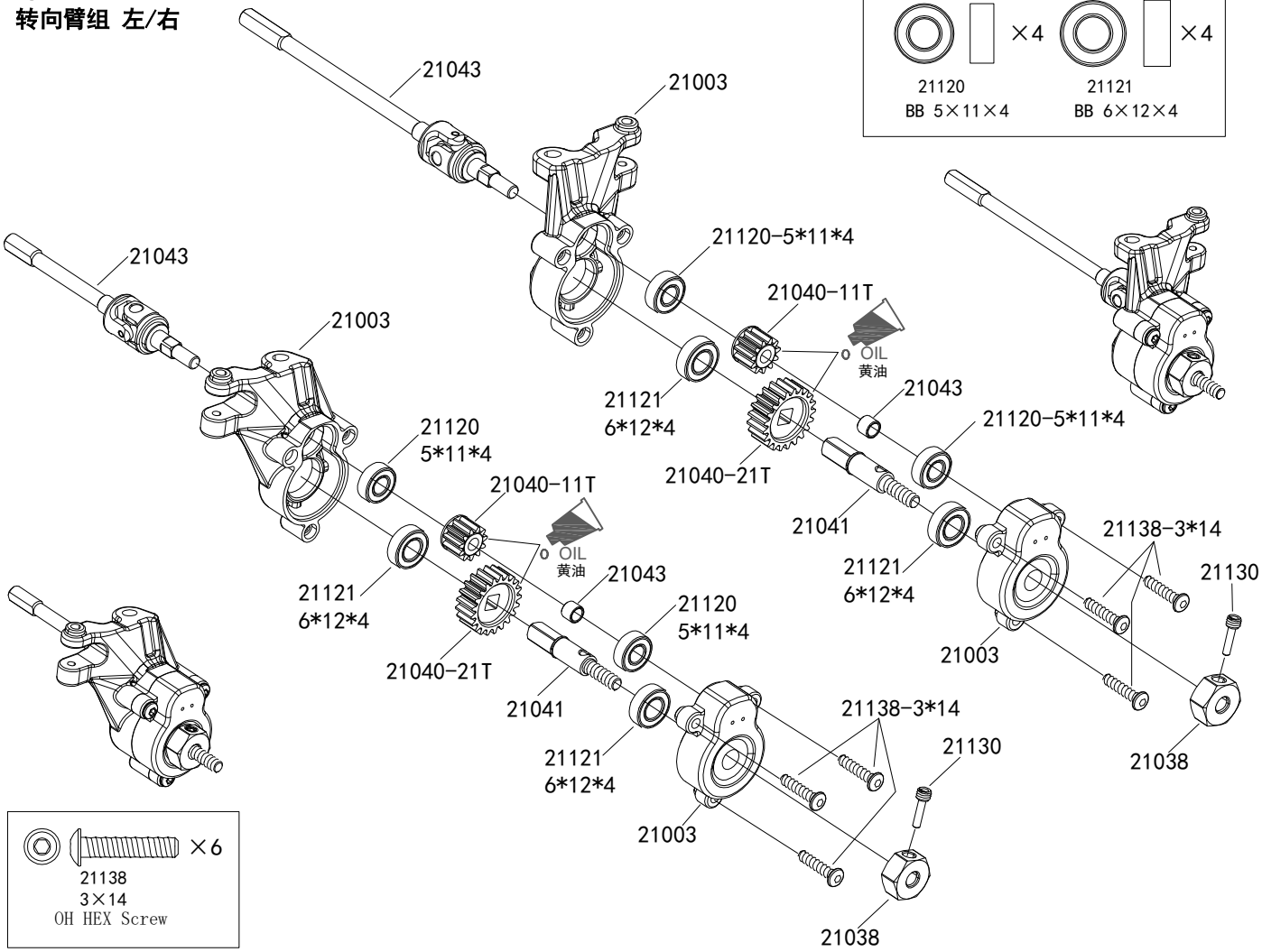

Front portal Assembly
前桥组

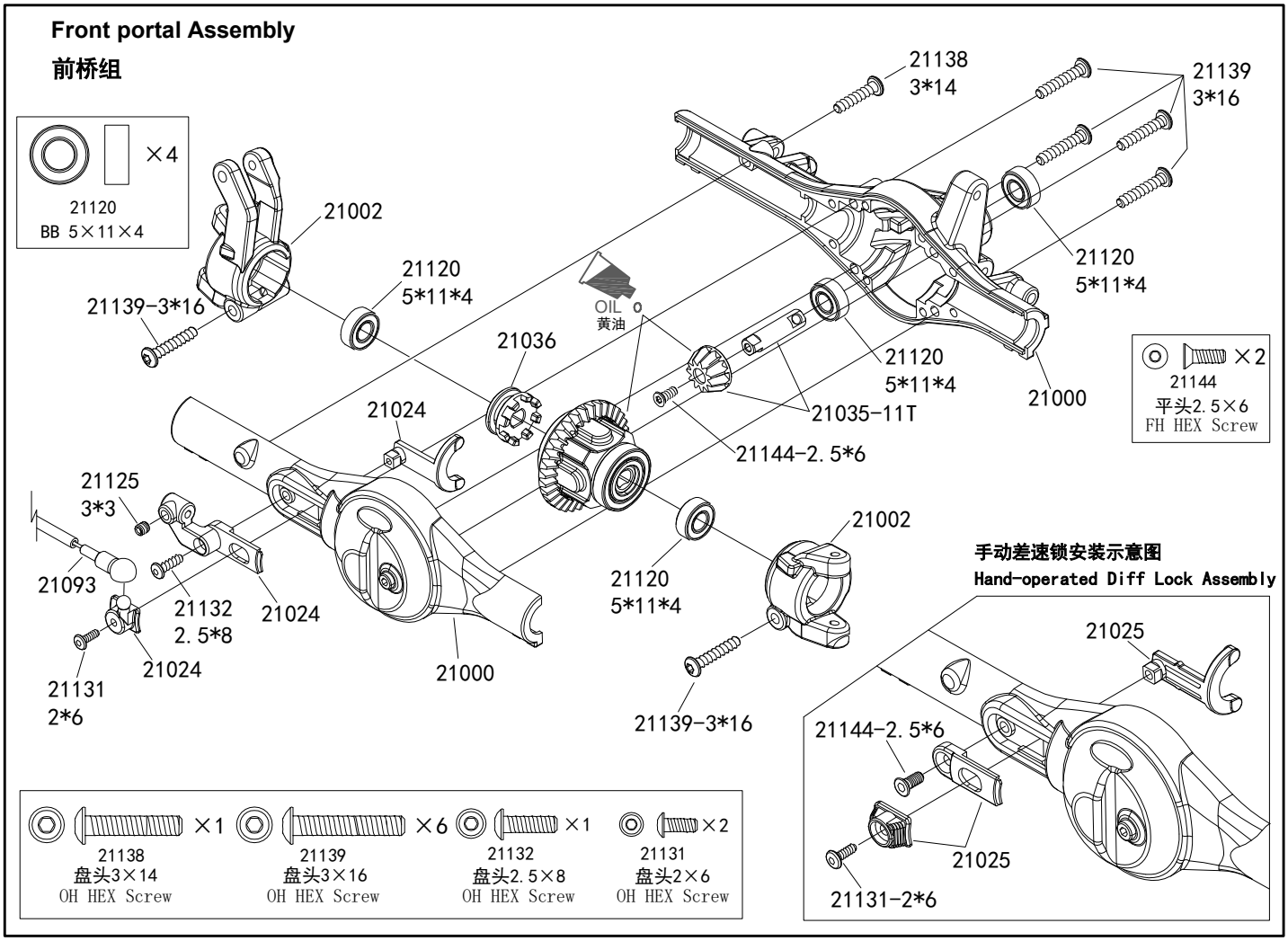

Front portal Assembly
前桥组

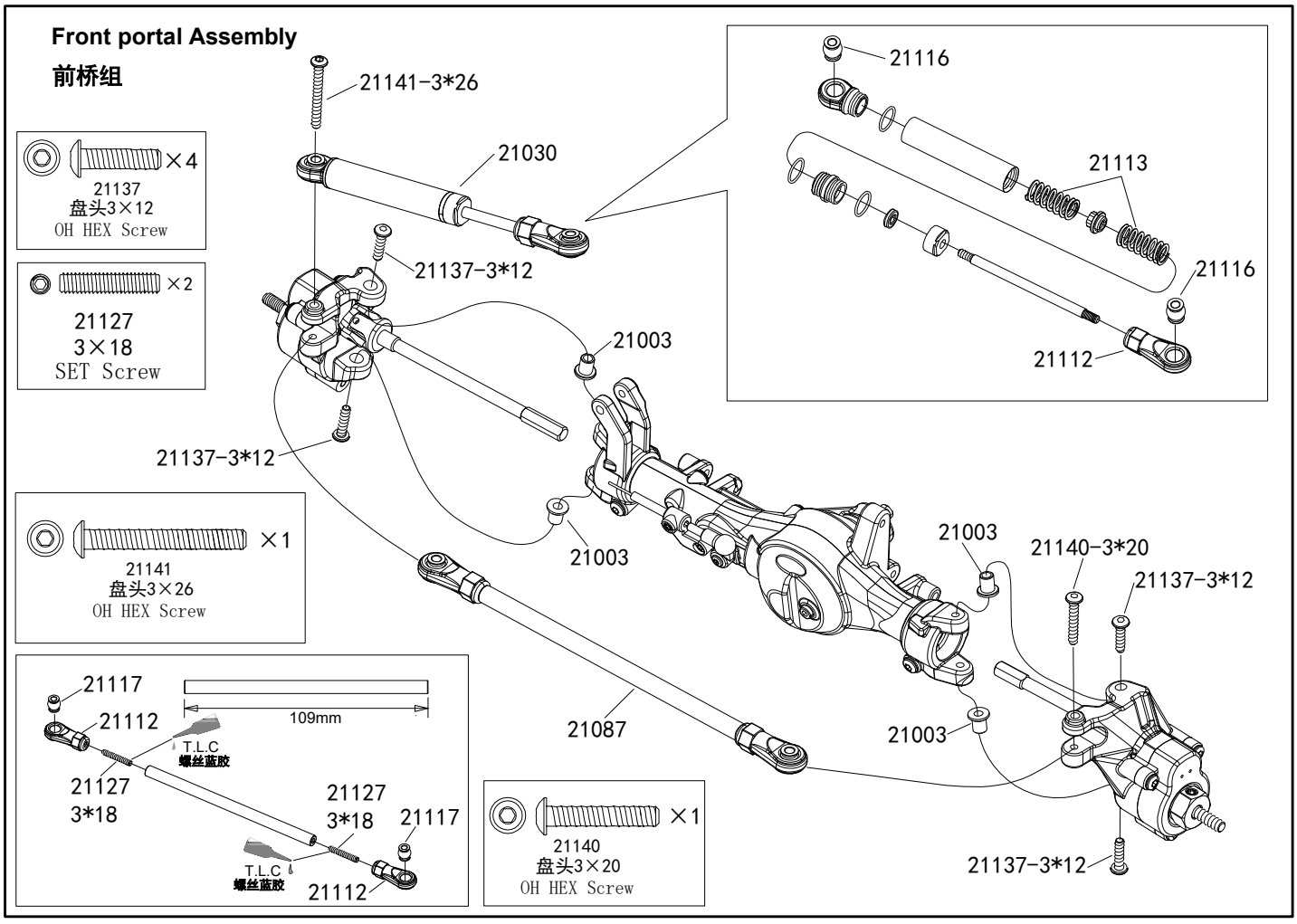

Rear portal Assembly
后桥组

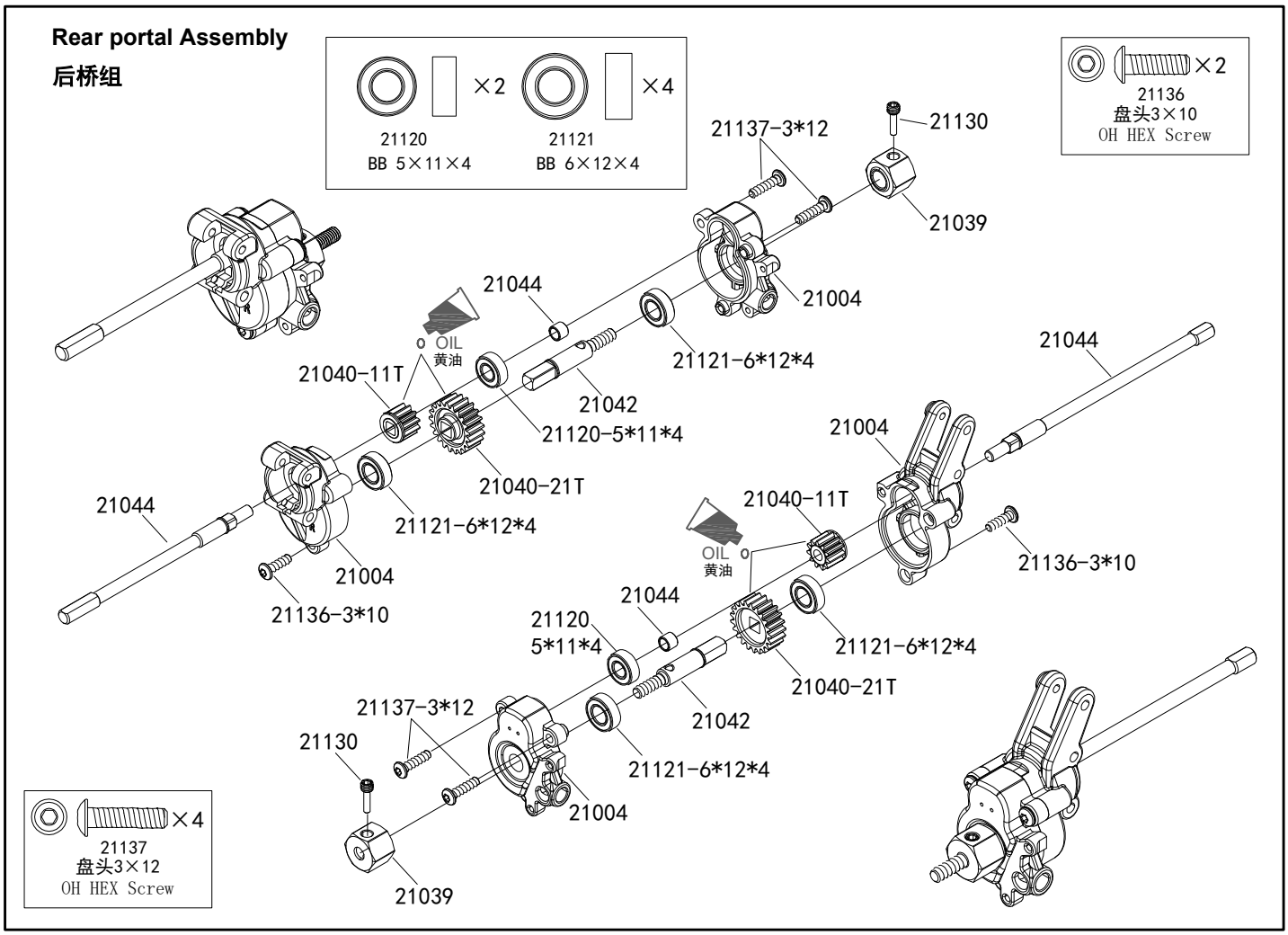

Rear portal Assembly
后桥组

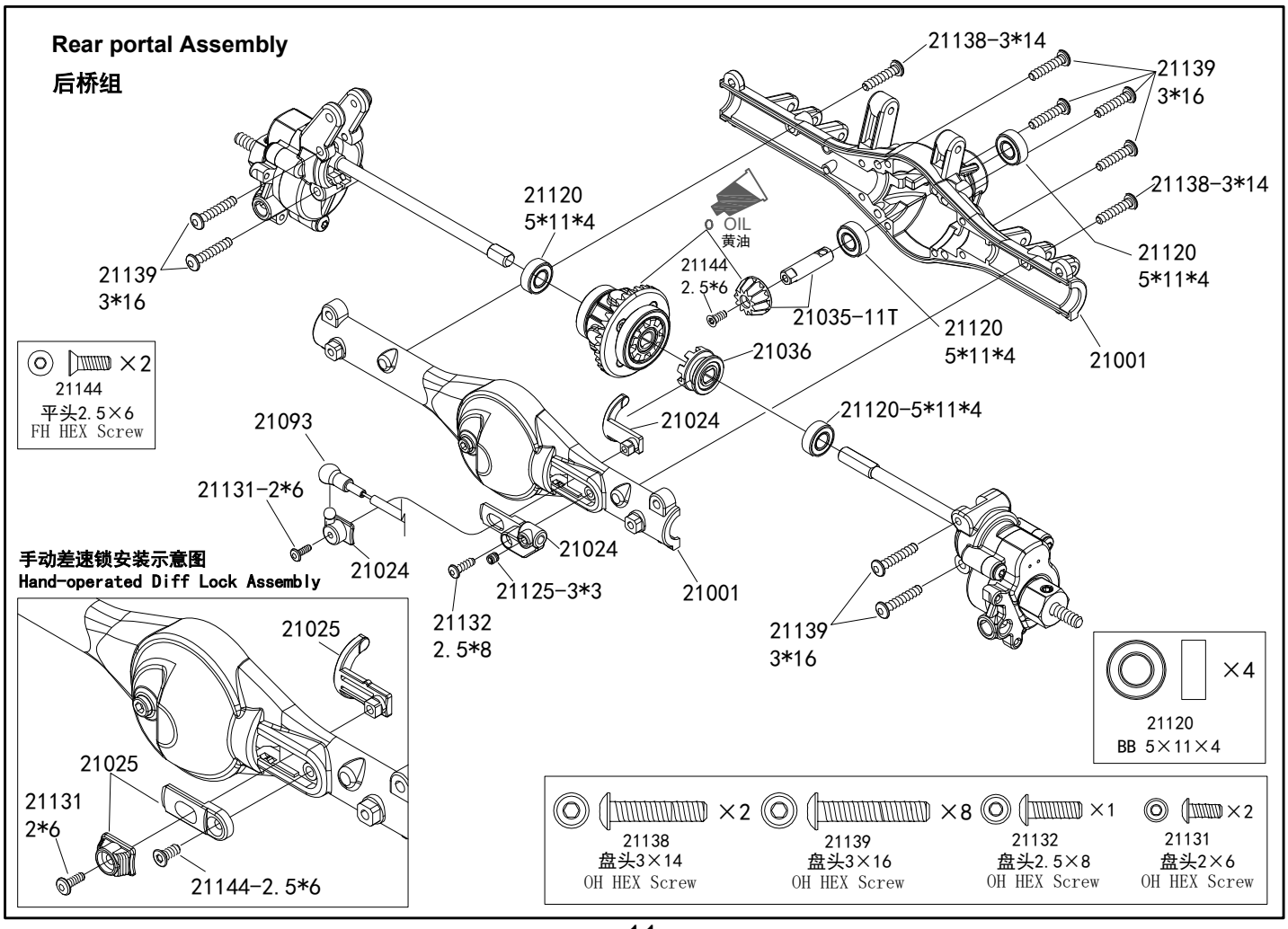

手动差速锁安装示意图
Hand-operated Diff Lock Assembly

Rear portal Assembly

后桥刹车组装

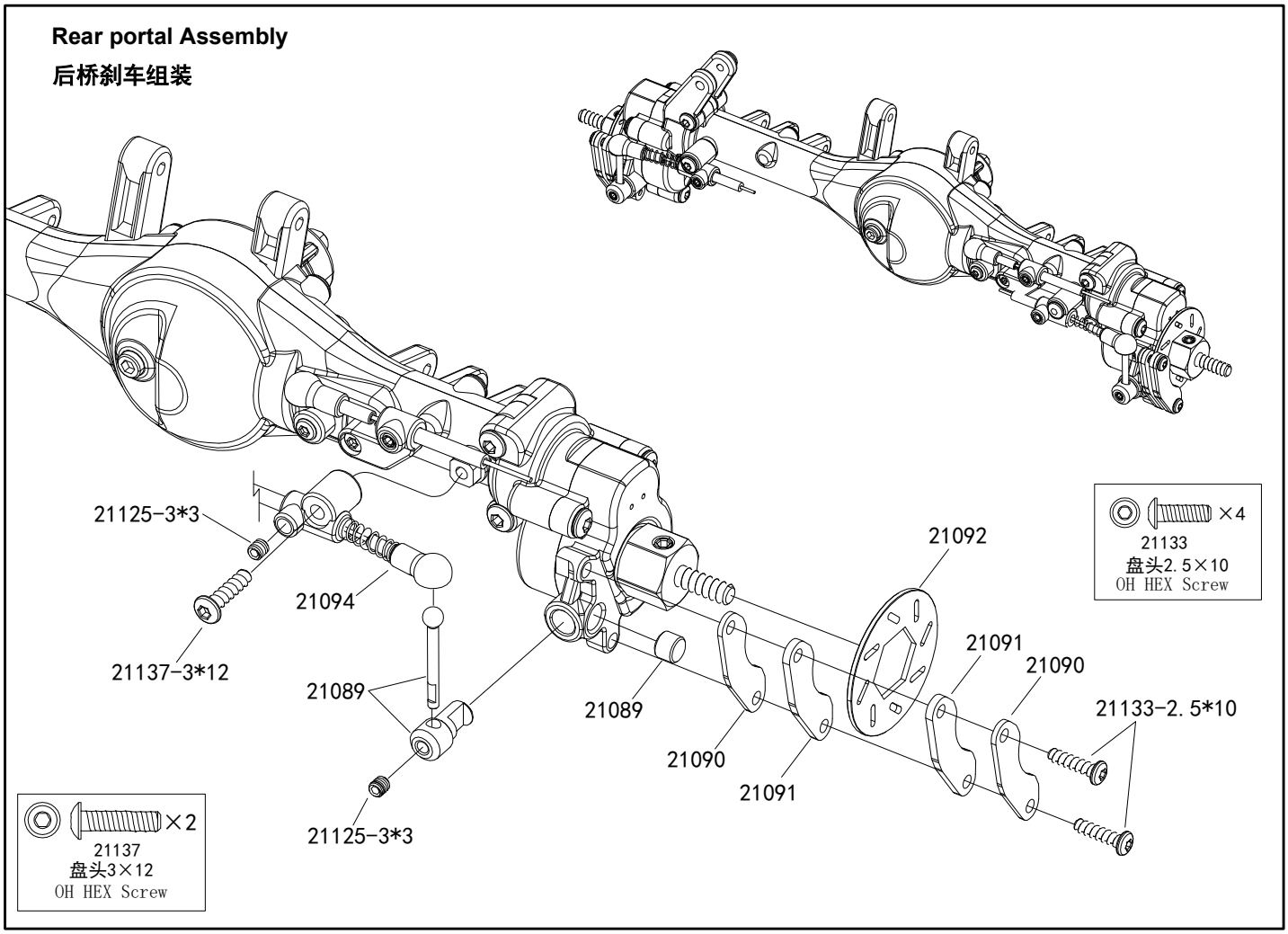

Shock Absorber Before/Middle/After

避震器 前/后

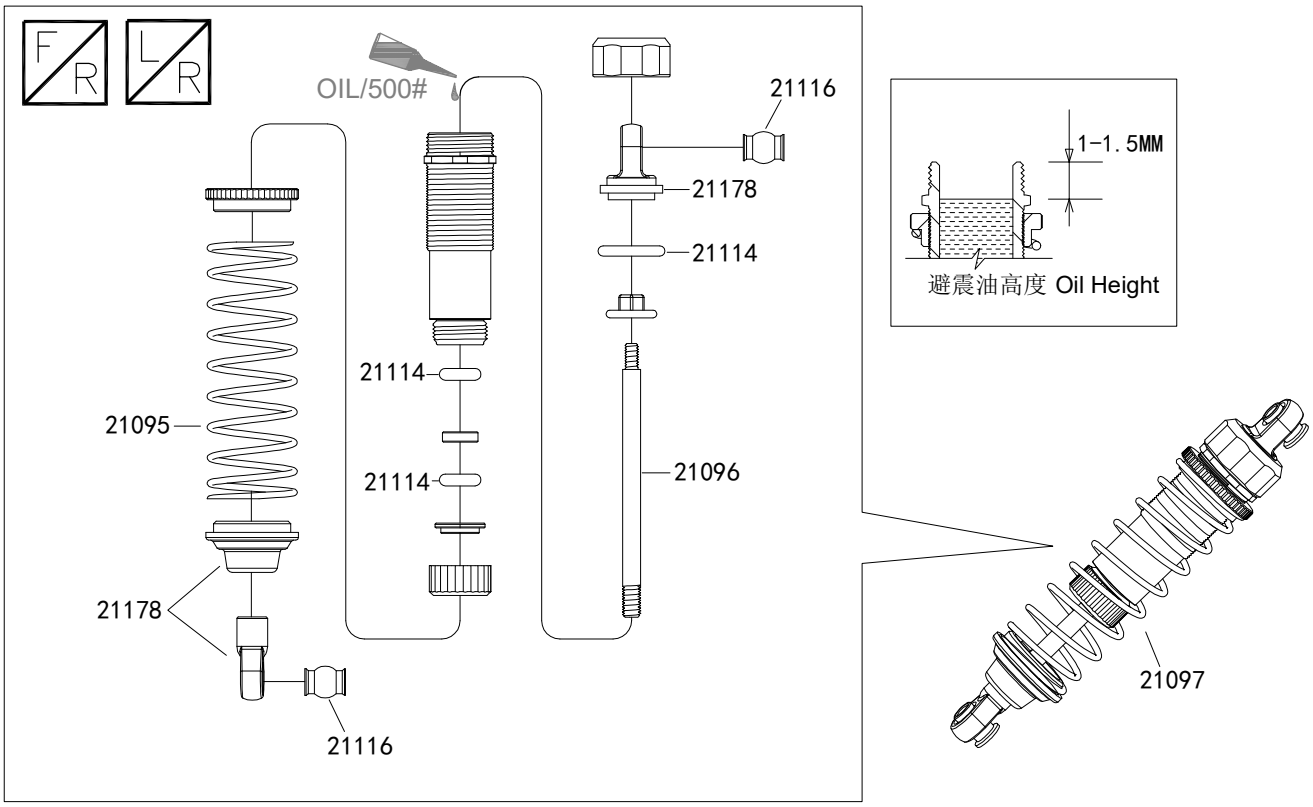

Front portal assembly linkage shock installation

前桥组拉杆、避震器安装

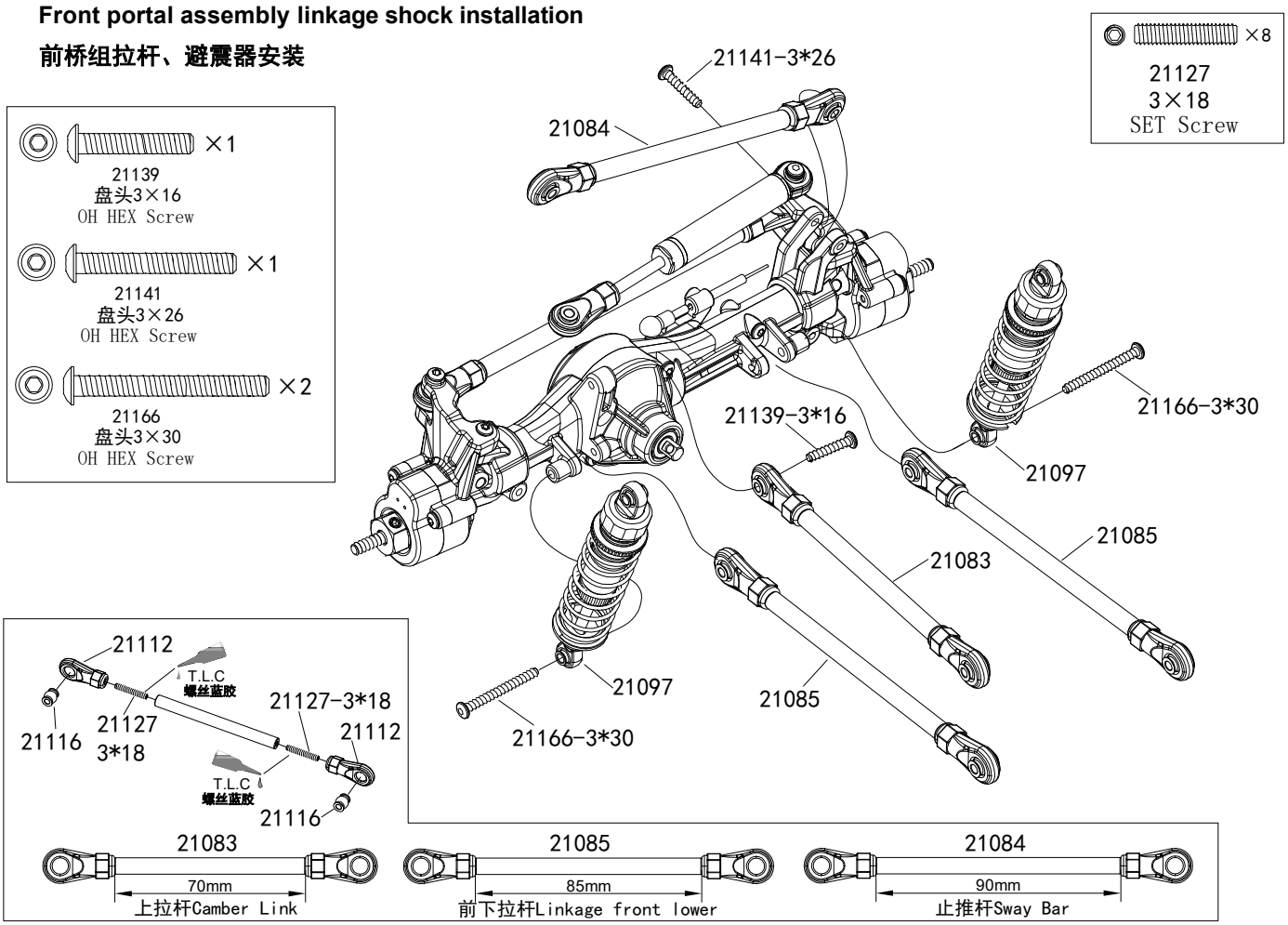

Rear portal assembly linkage shock installation

后桥组拉杆、避震器安装

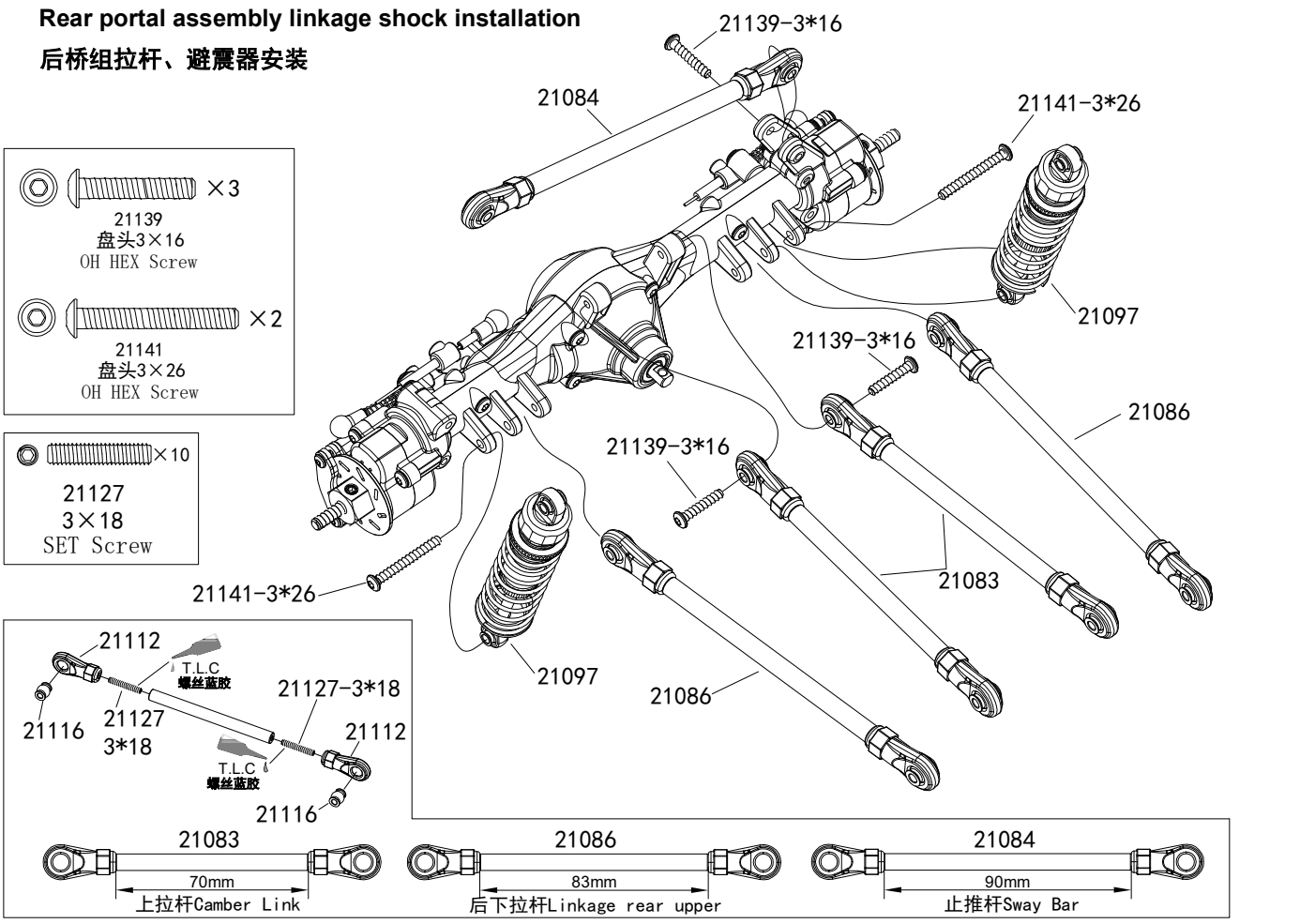

Gearbox Assembly
波箱组装

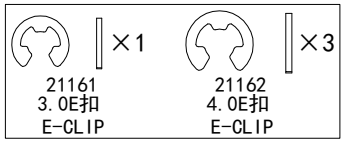

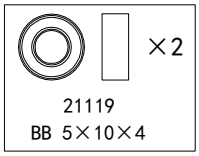

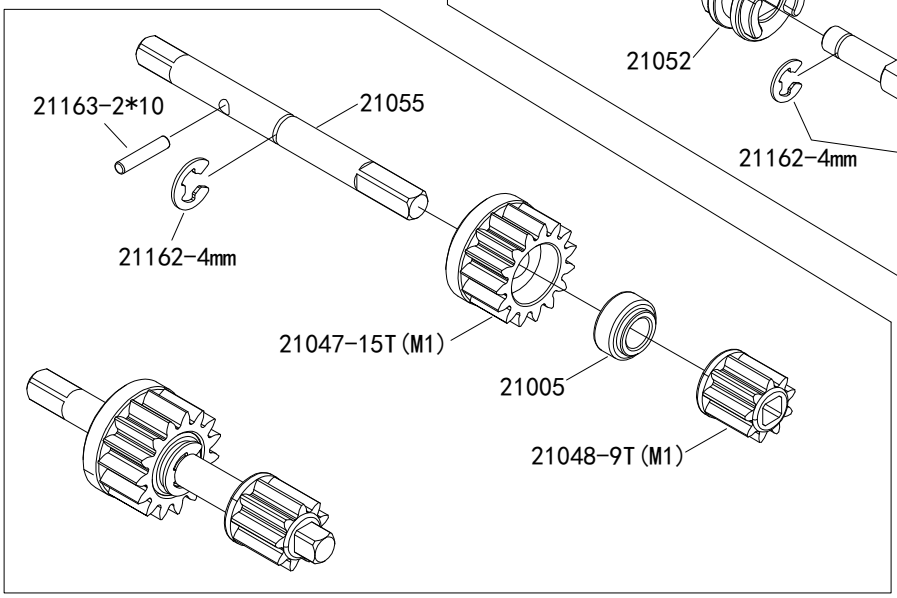

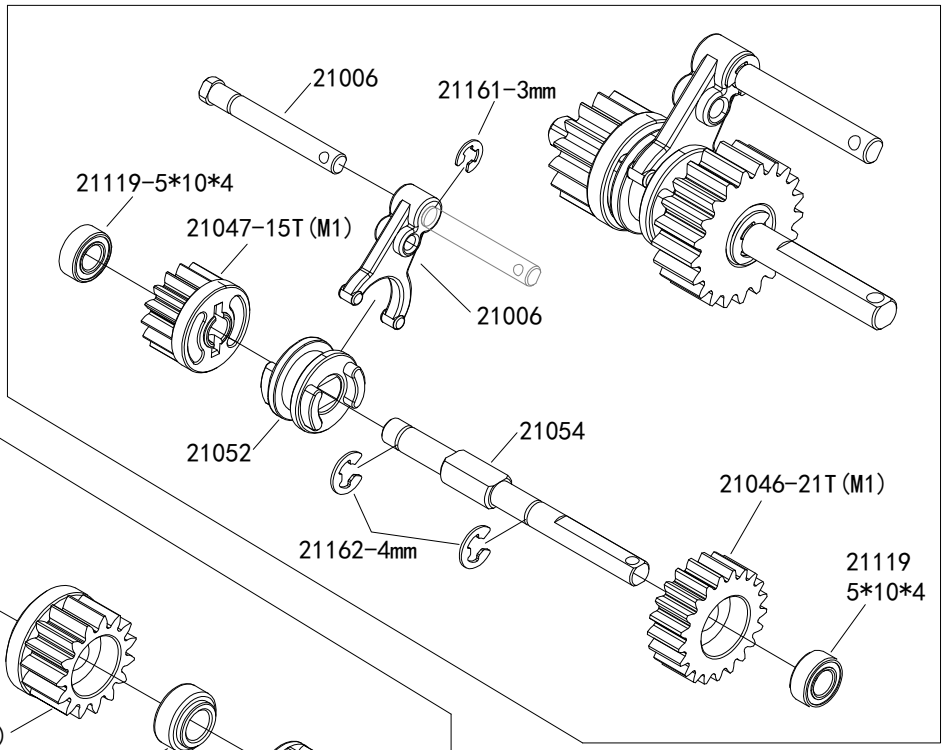

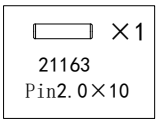

Gearbox Assembly
波箱组装

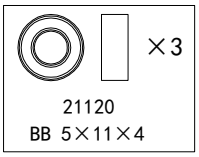

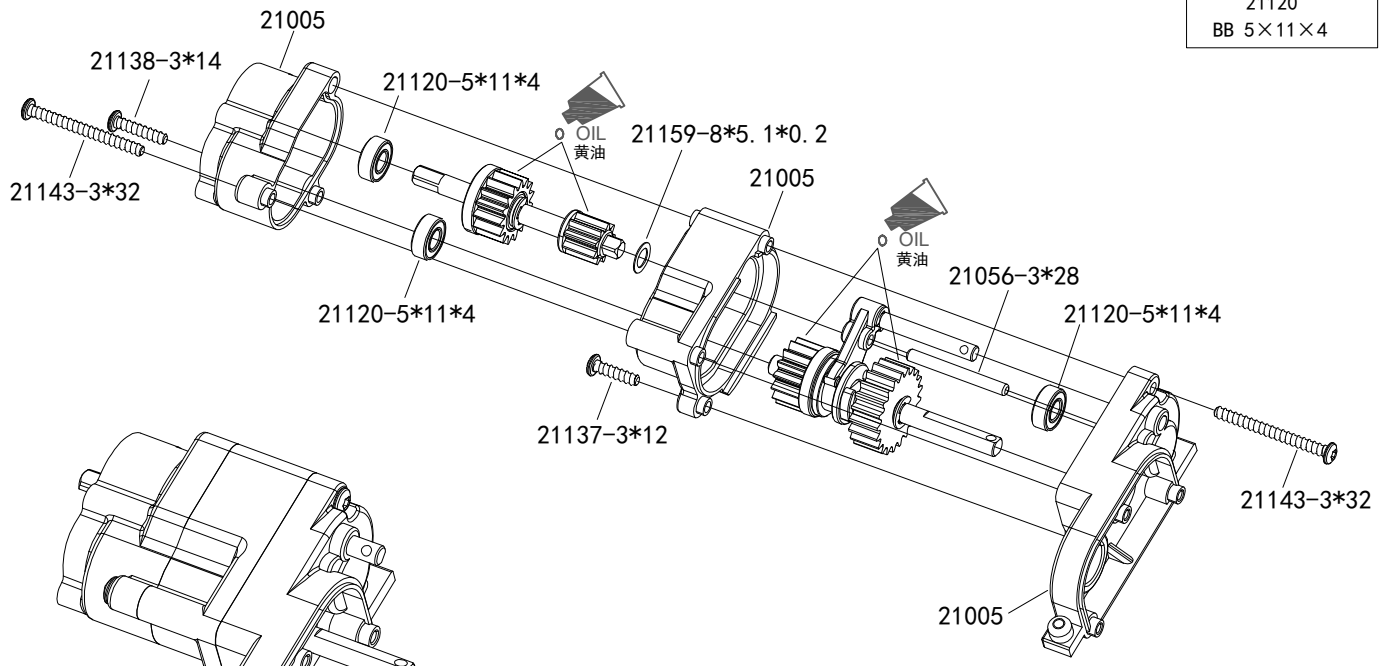

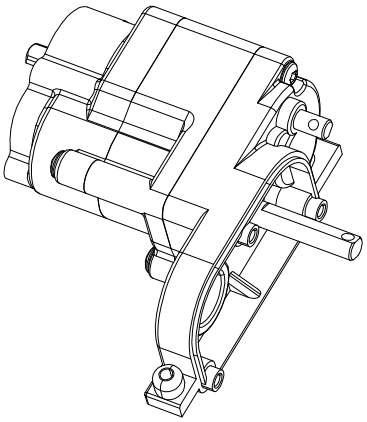

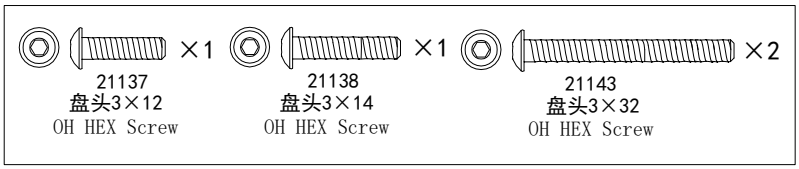

Gearbox Assembly
波箱组装

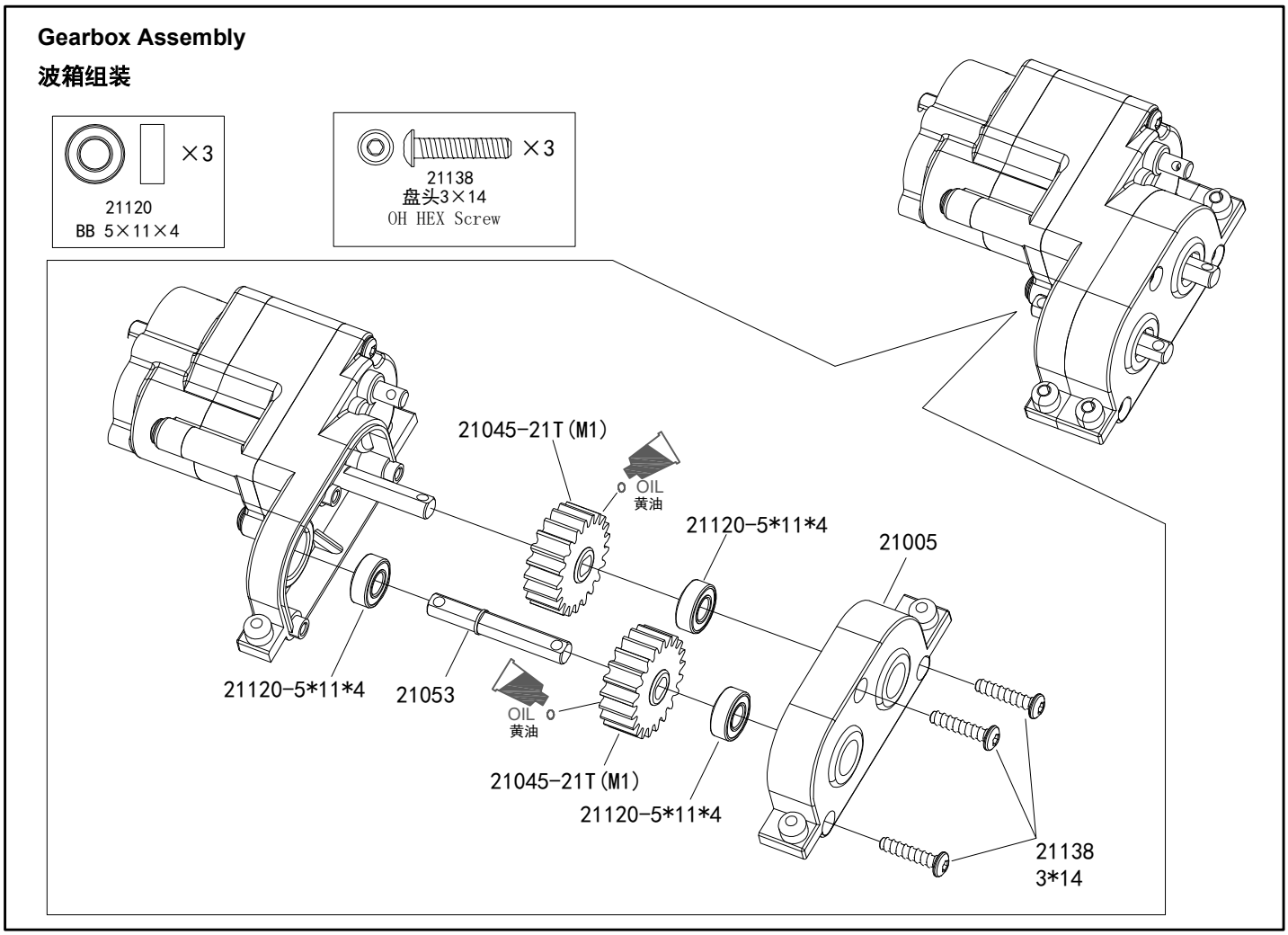

Gearbox Assembly
波箱组装

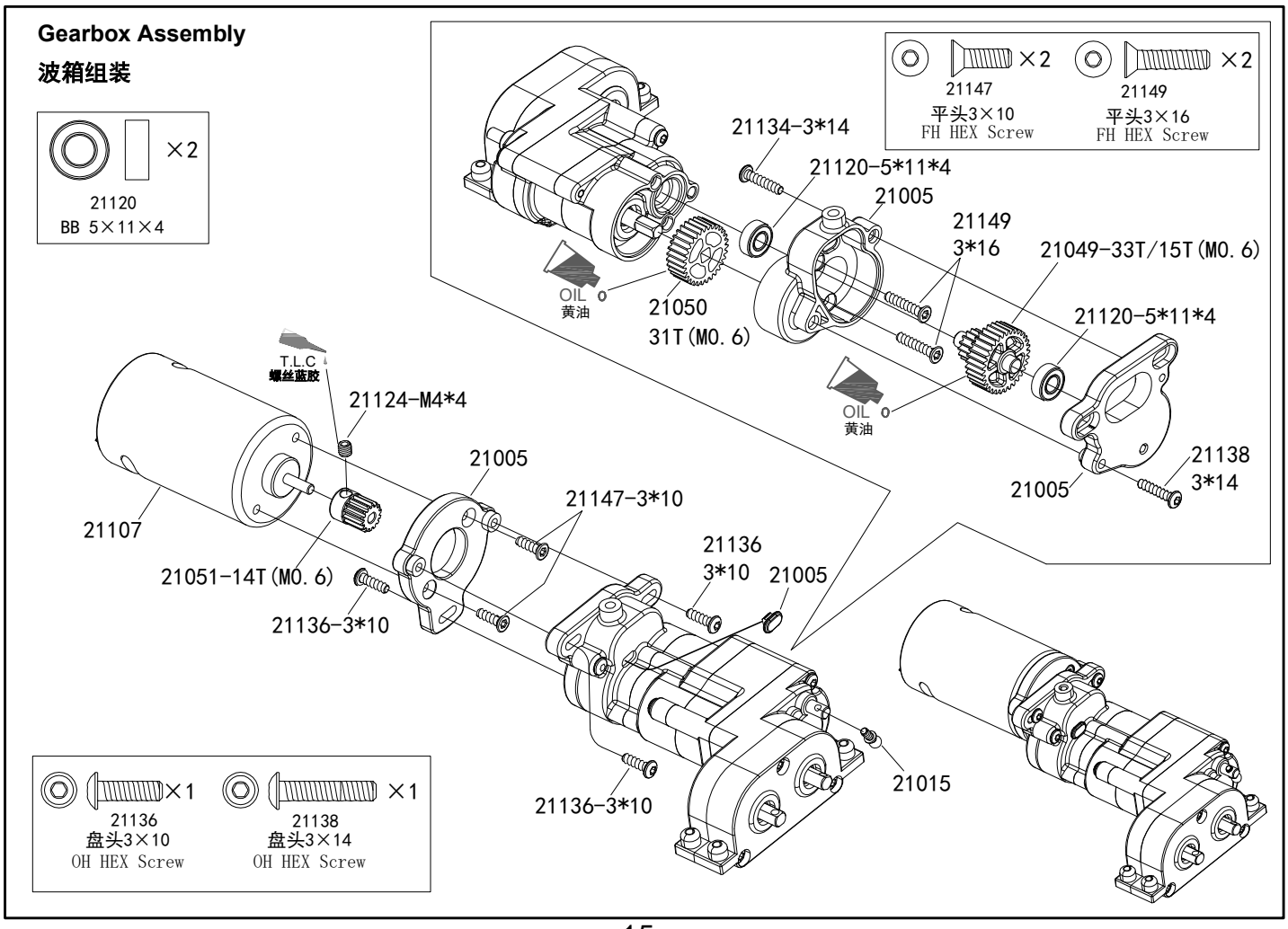

Differential lock servo assembly

差速锁舵机组装

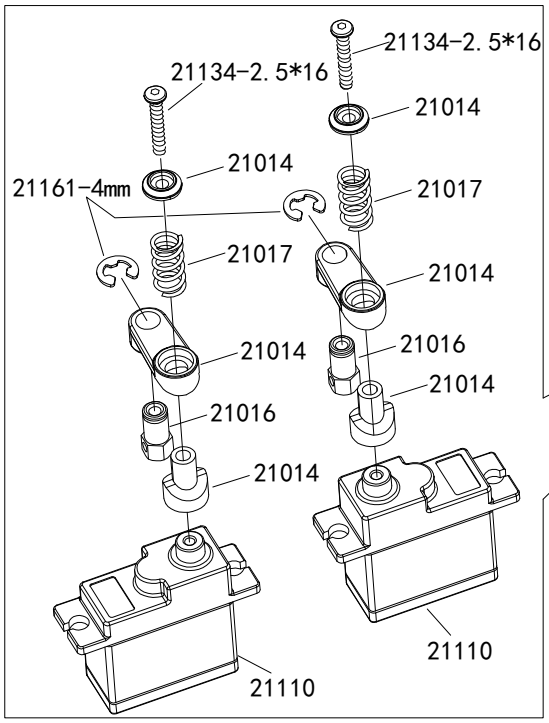

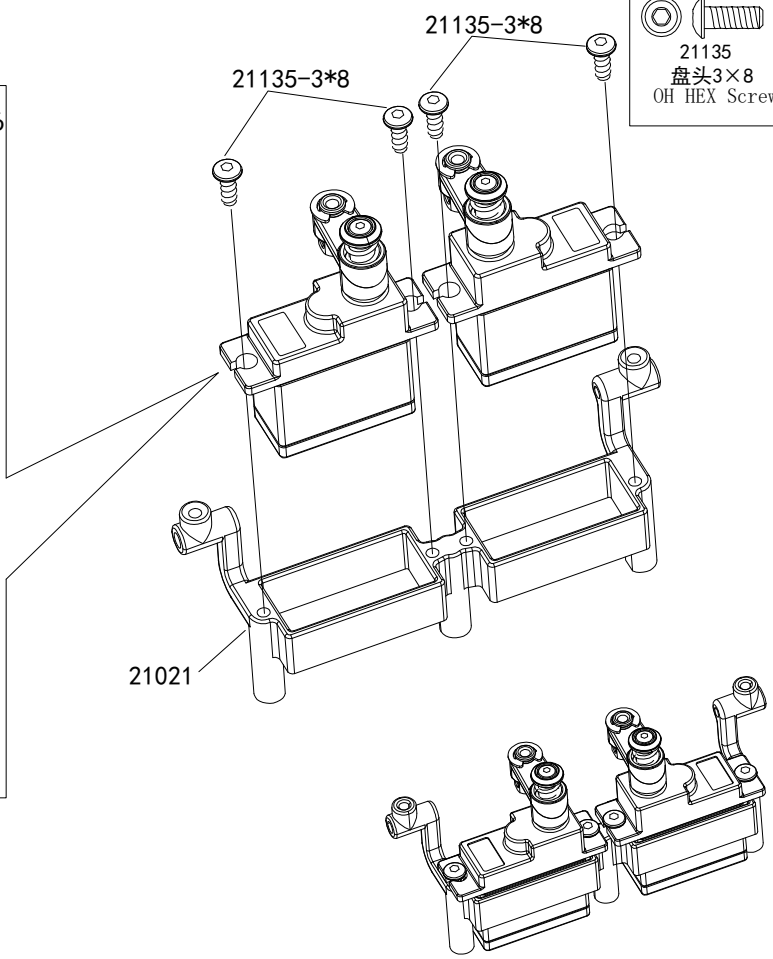

×4
21135
盘头3×8
OH HEX Screw

×2
21134
盘头2.5×16
OH HEX Screw

Chassis Assembly

车架中段组装

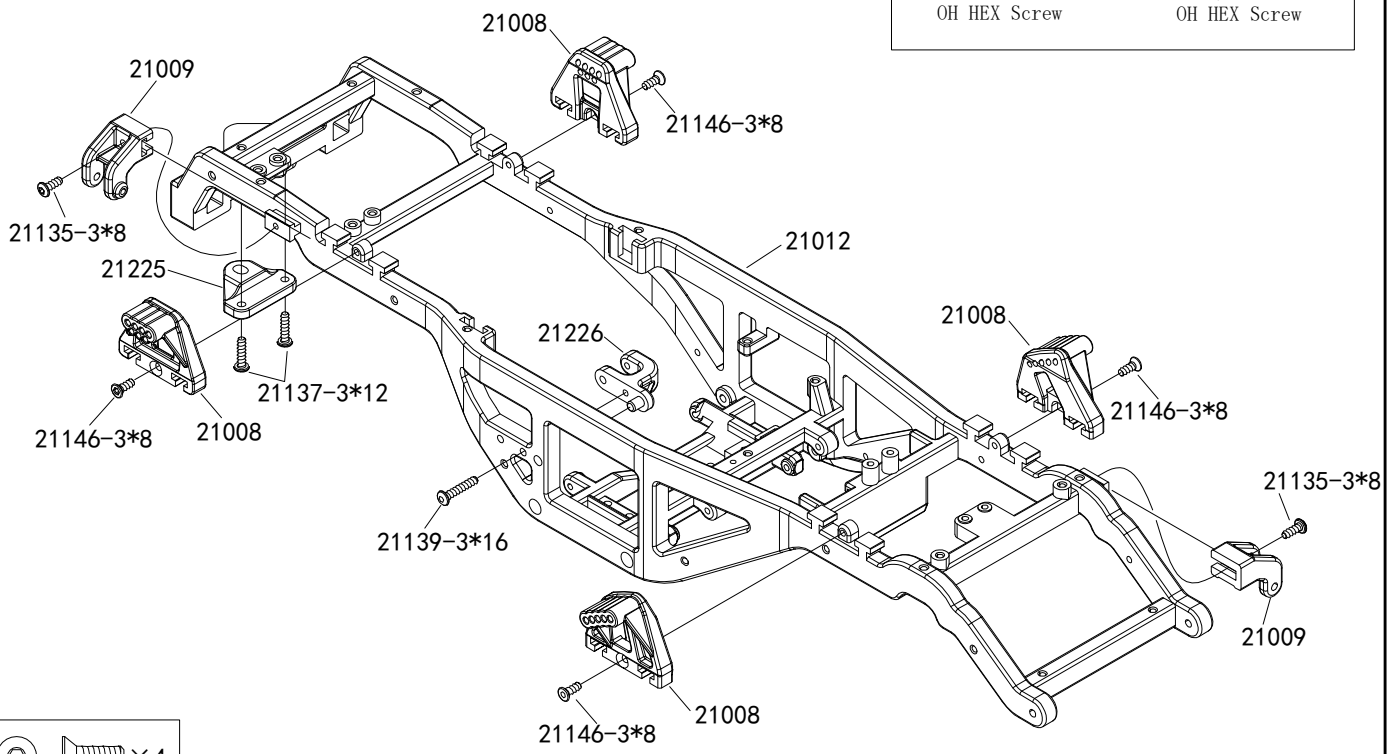

×2
21137
盘头3×12
OH HEX Screw

×3
21139
盘头3×16
OH HEX Screw

×4
21146
平头3×8
FH HEX Screw

Chassis Assembly

车架中段组装

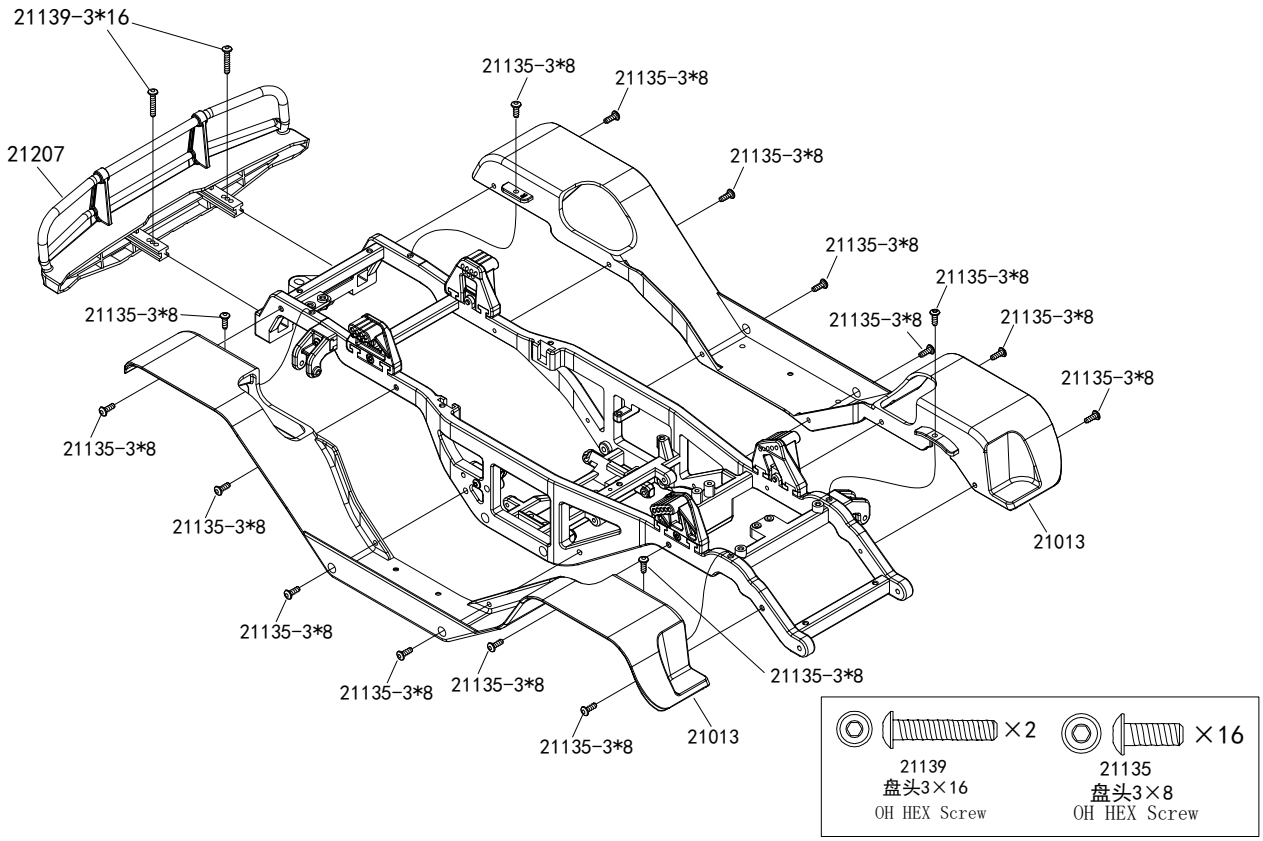

Chassis Assembly

车架中段组装

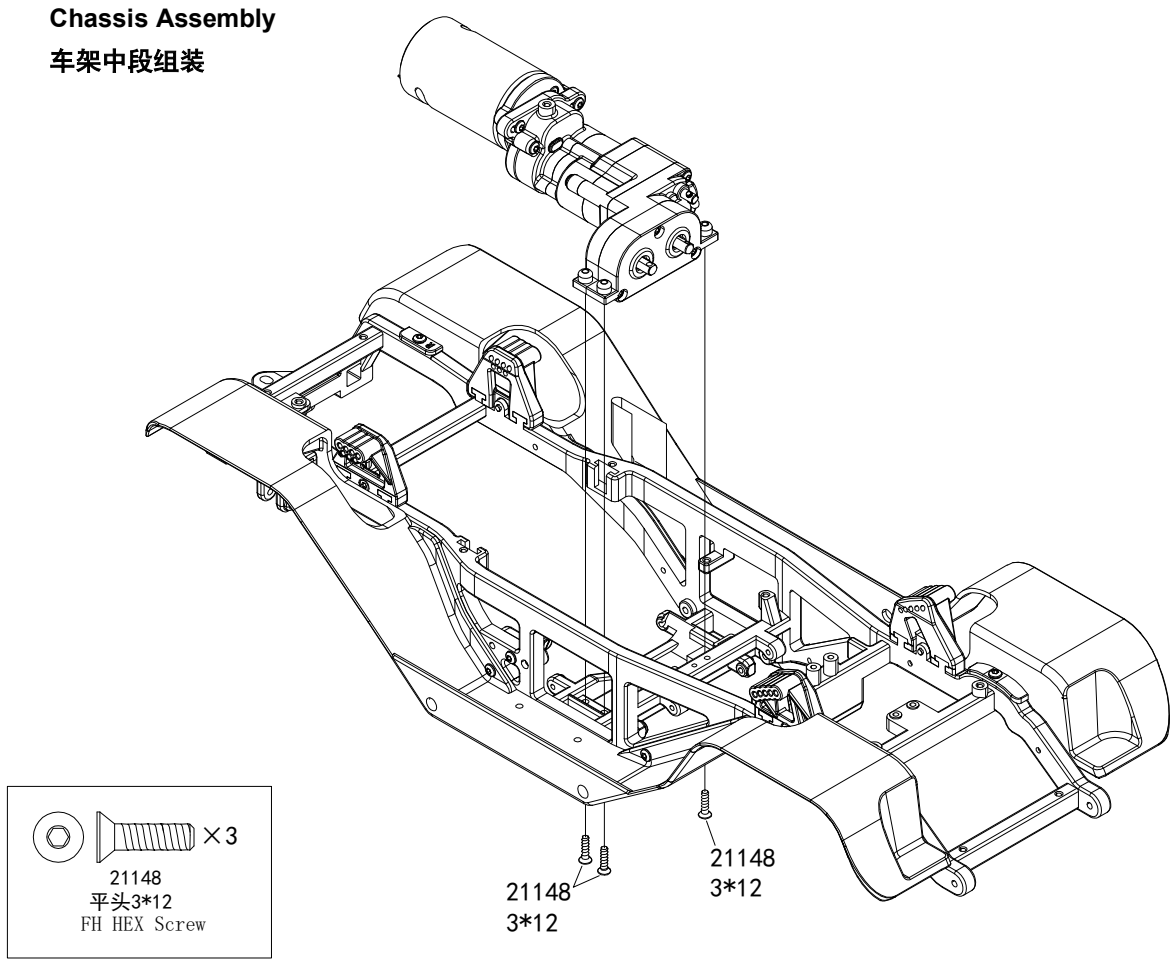

Chassis Assembly
车架中段组装

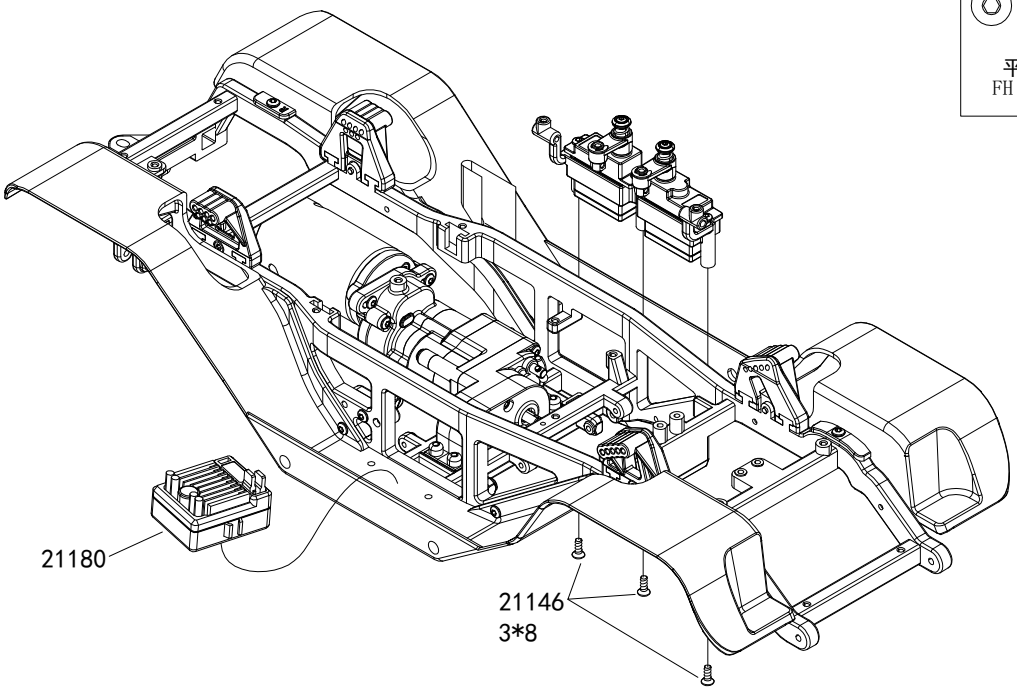

×5
21146
平头3×8
FH HEX Screw

Chassis Assembly
车架中段组装

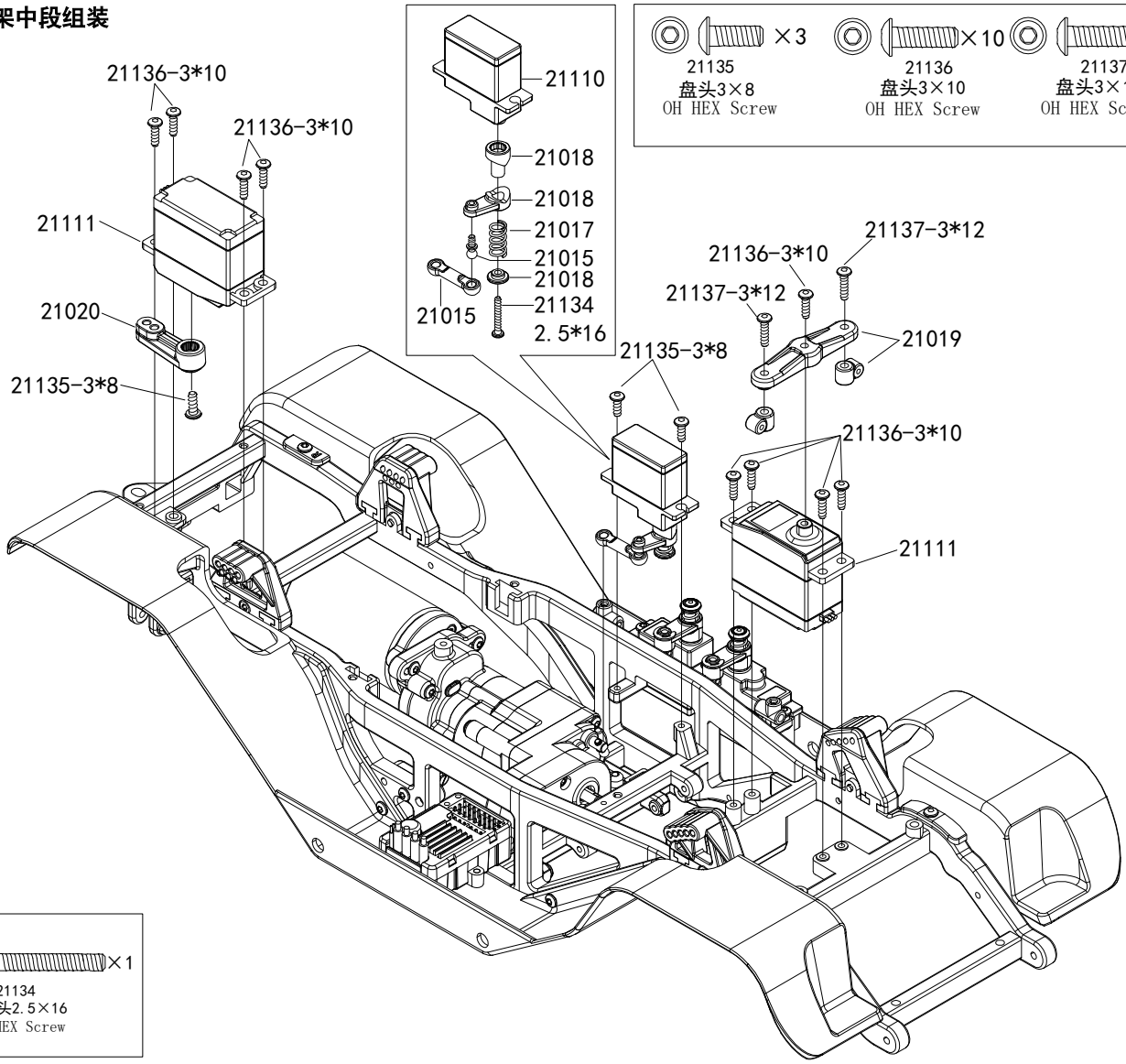

×3
21135
盘头3×8
OH HEX Screw

×10
21136
盘头3×10
OH HEX Screw

×2
21137
盘头3×12
OH HEX Screw

×1
21134
盘头2.5×16
OH HEX Screw

Vertical universal shaft assembly

纵万向轴组装　前/后

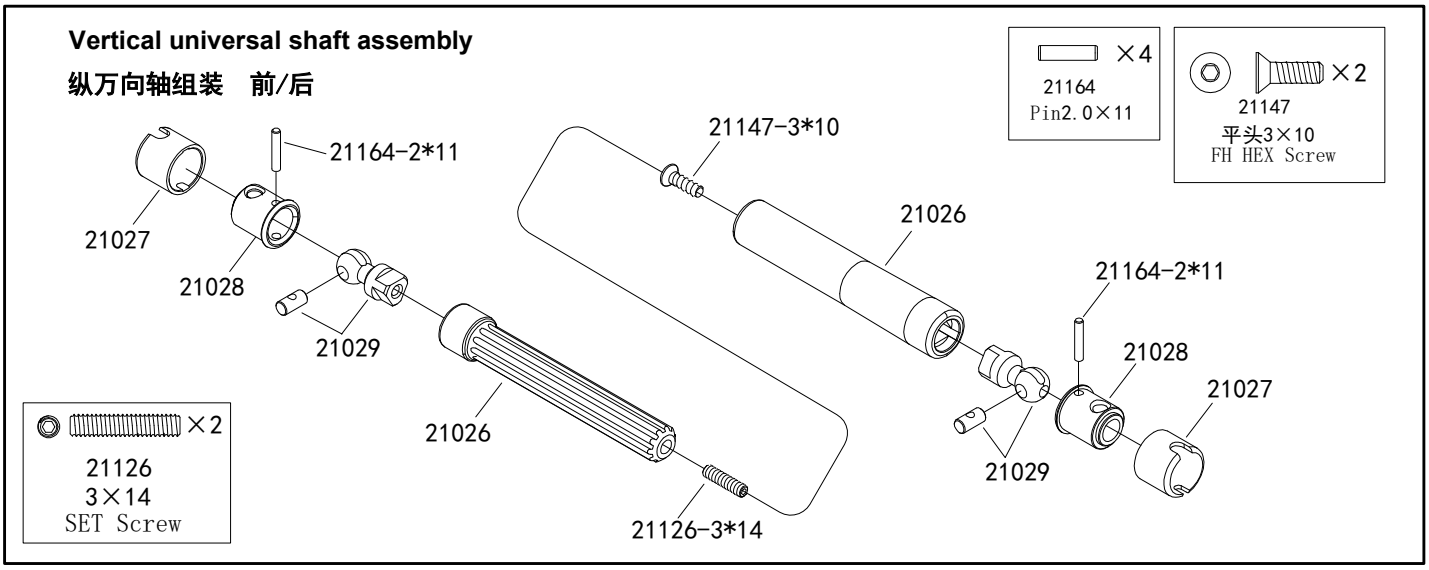

Modular Assembly

前后桥总组装

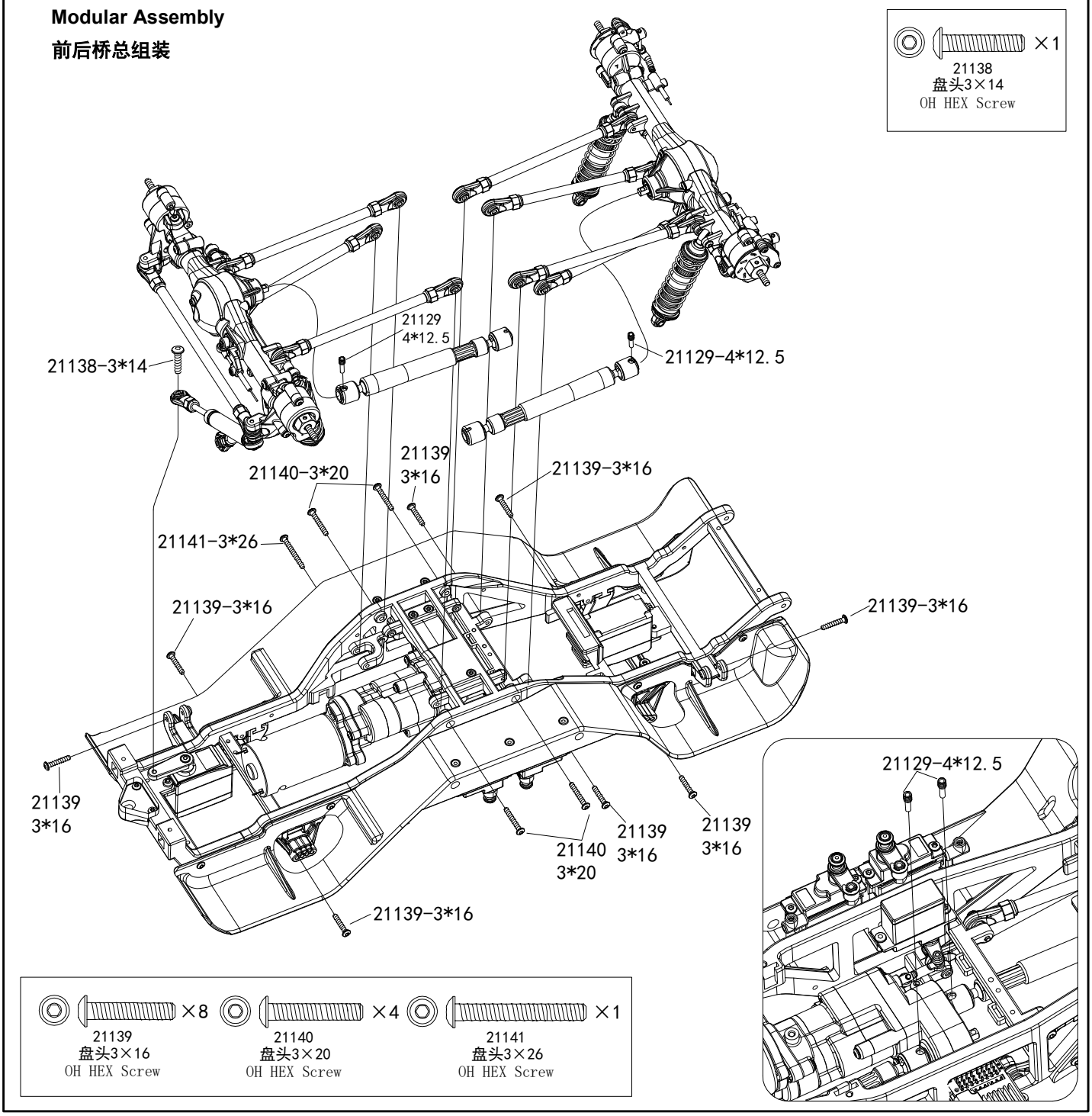

Battery box assembly
电池盒组装

如果使用更小体积电池，可通过安装固定座，来缩小电池仓尺寸，防止电池前后移动而损坏。

Battery compartment can be adjusted by the mount to hold the short size battery in case your battery is damaged due to move back and forth.

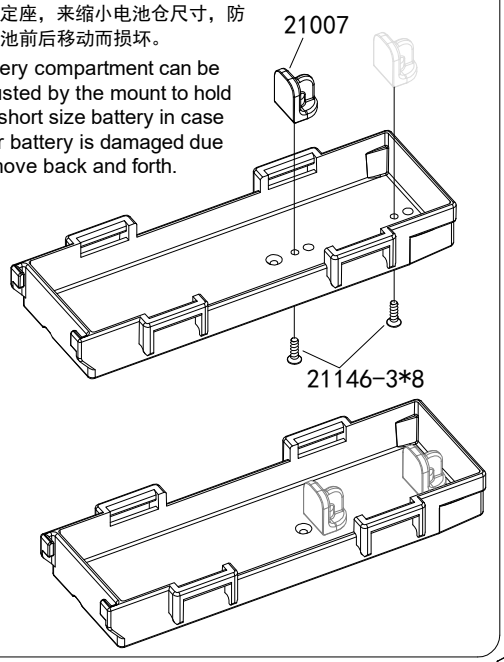

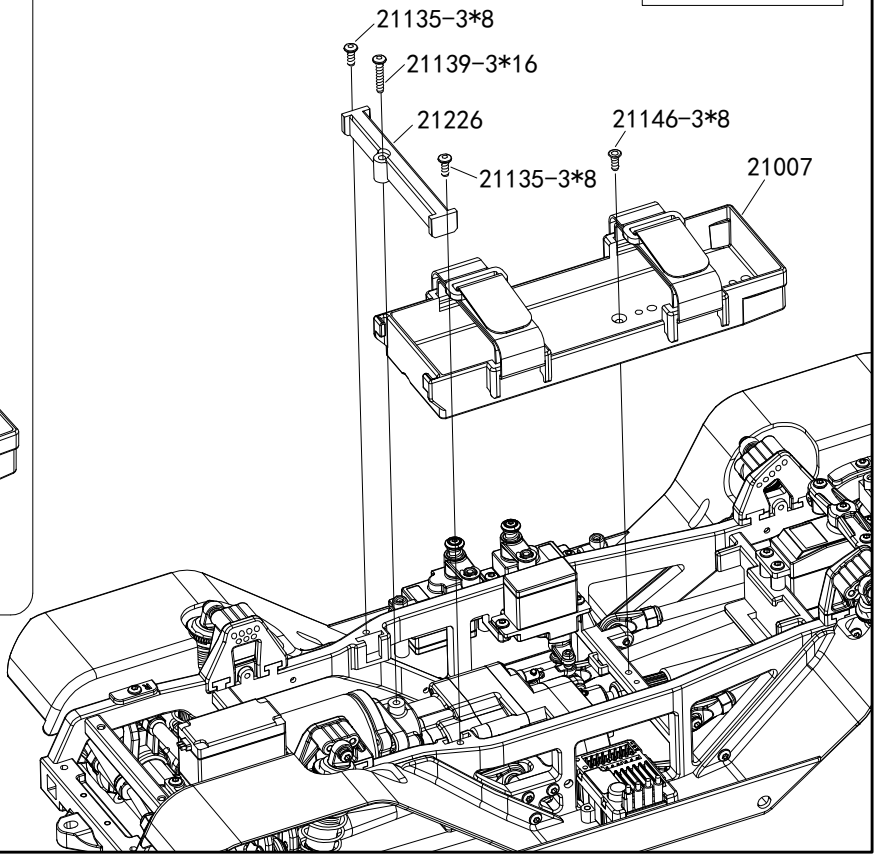

×2
21146
平头3×8
FH HEX Screw

×2
21135
盘头3×8
OH HEX Screw

×1
21139
盘头3×16
OH HEX Screw

Differential lock wires fixure
差速锁拉绳安装

×2
21137
盘头3×12
OH HEX Screw

×8
21125
3×3
SET Screw

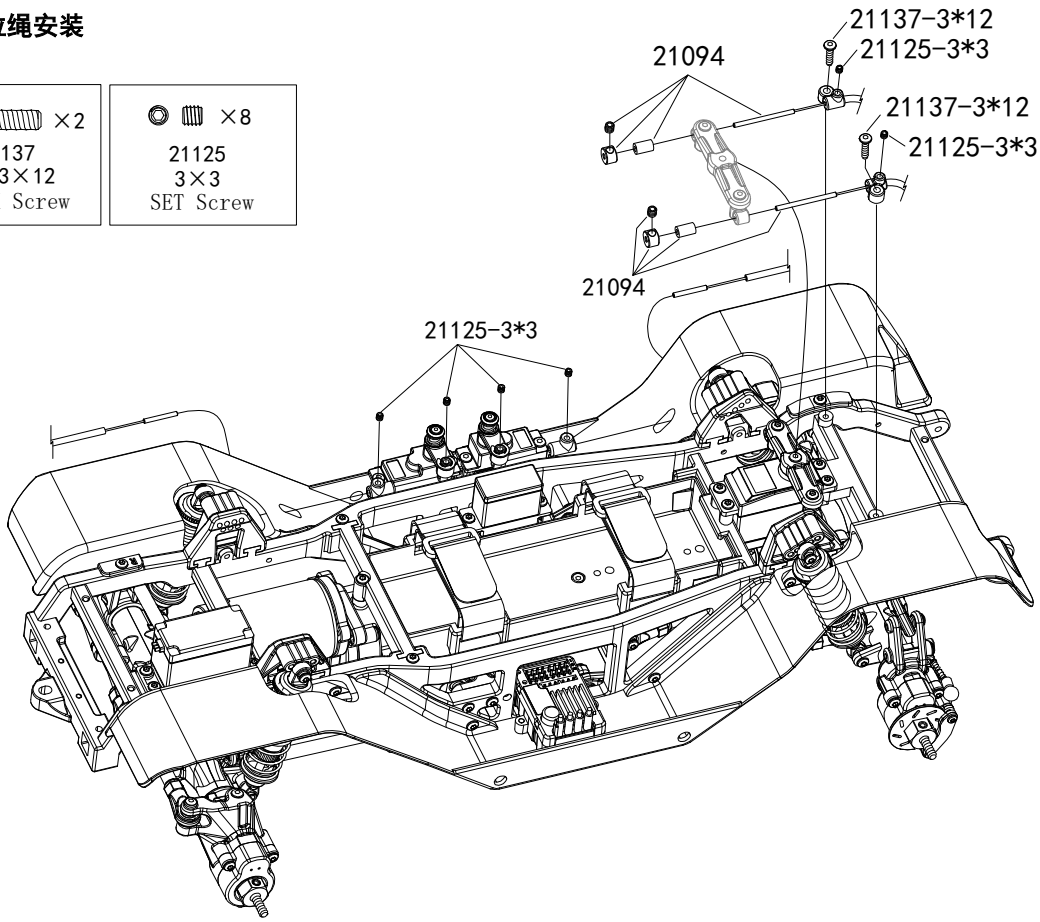

LED lights Assembly
车灯组装

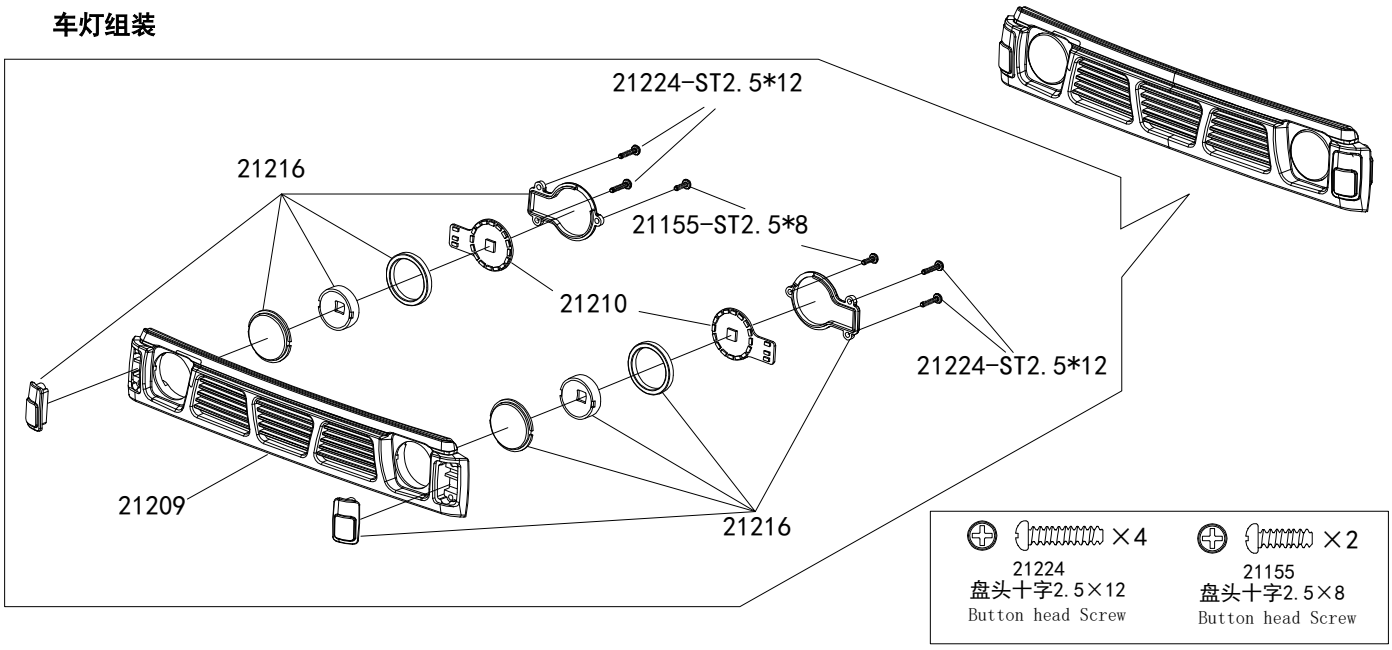

LED lights Assembly
车灯组装

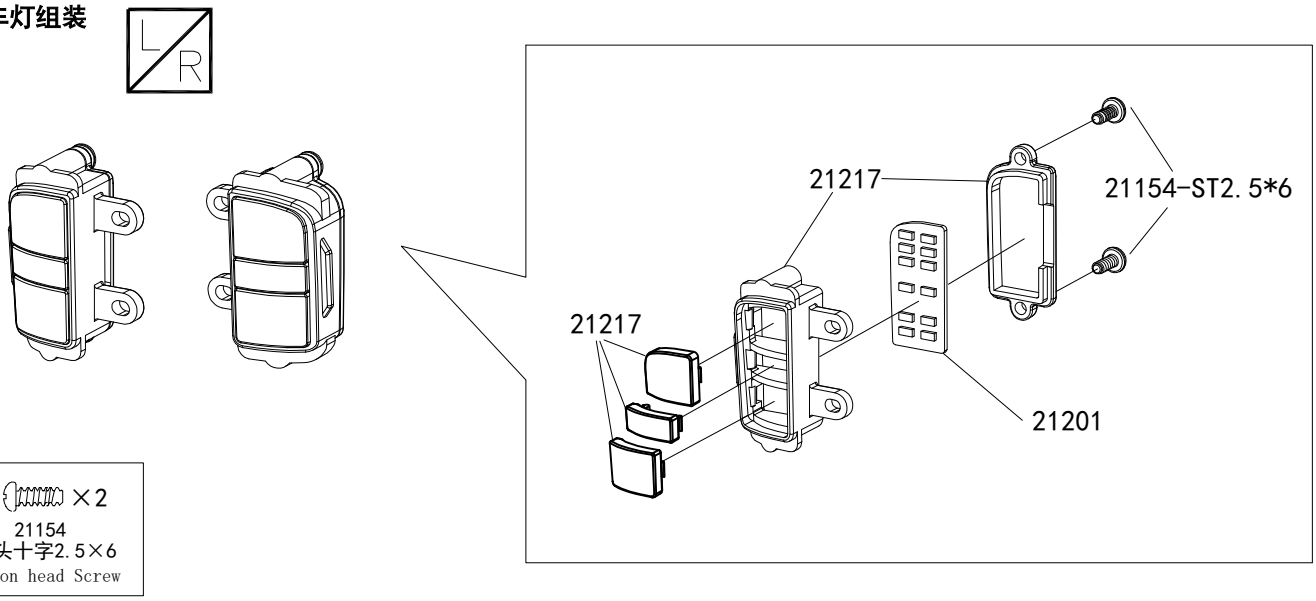

LED lights Assembly
车灯组装

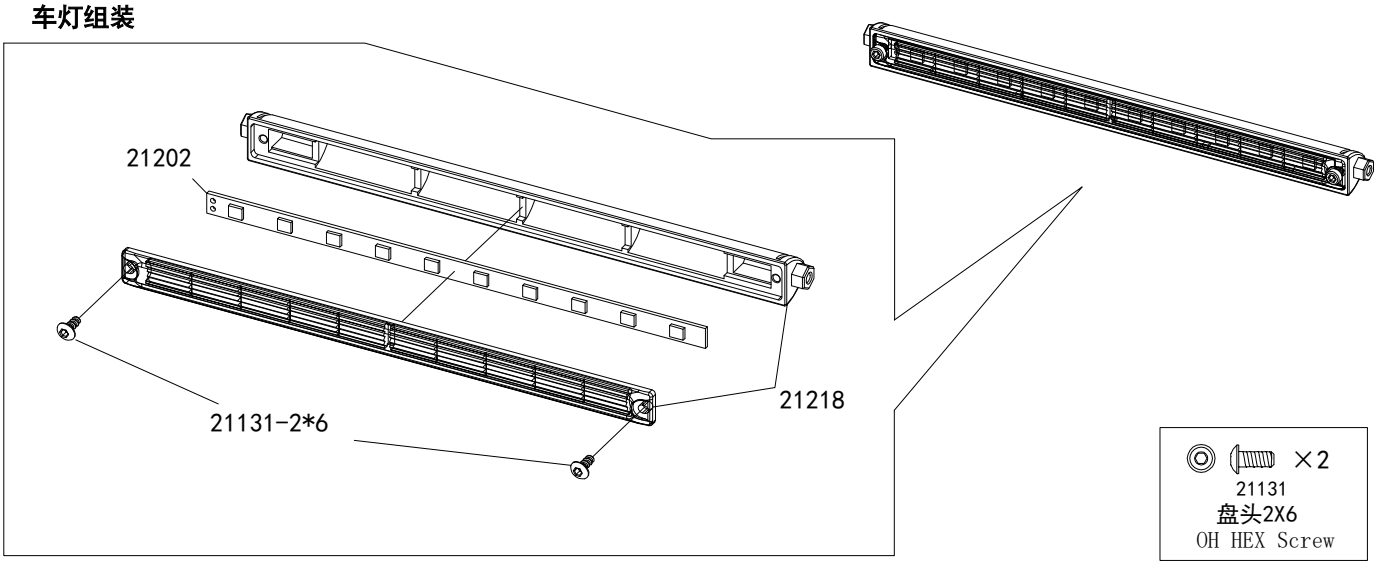

Cockpit set Assembly

驾驶舱组装

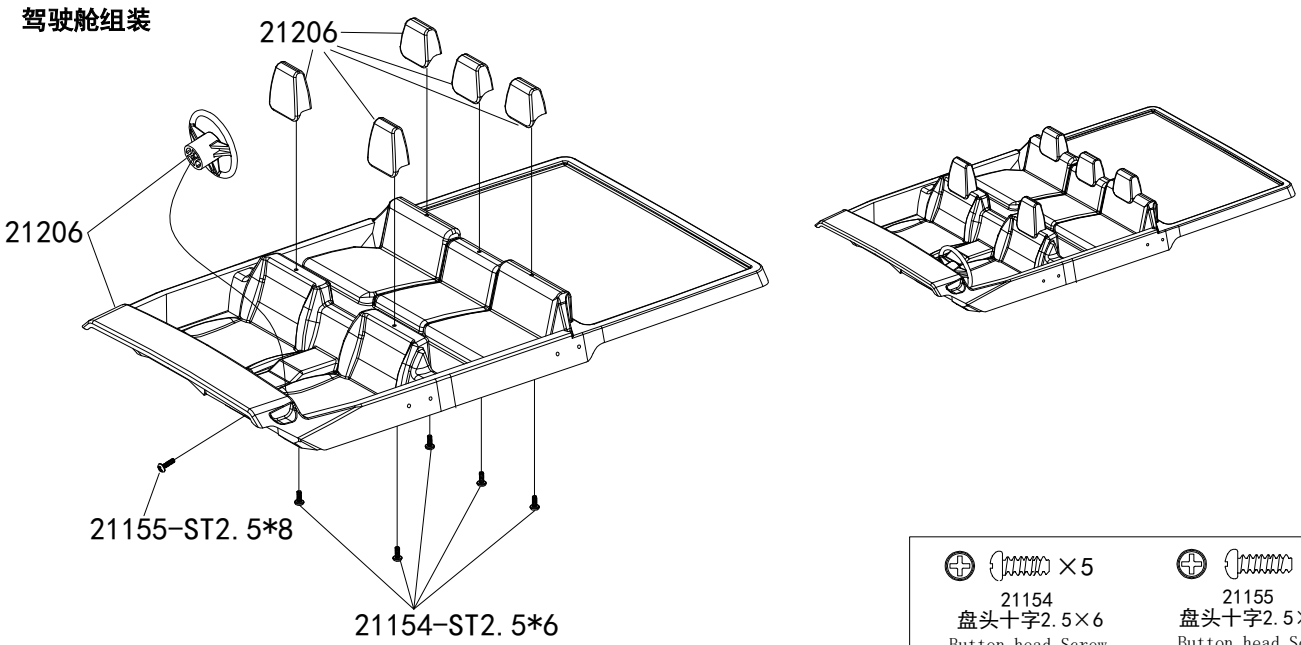

Body Assembly

车壳组装

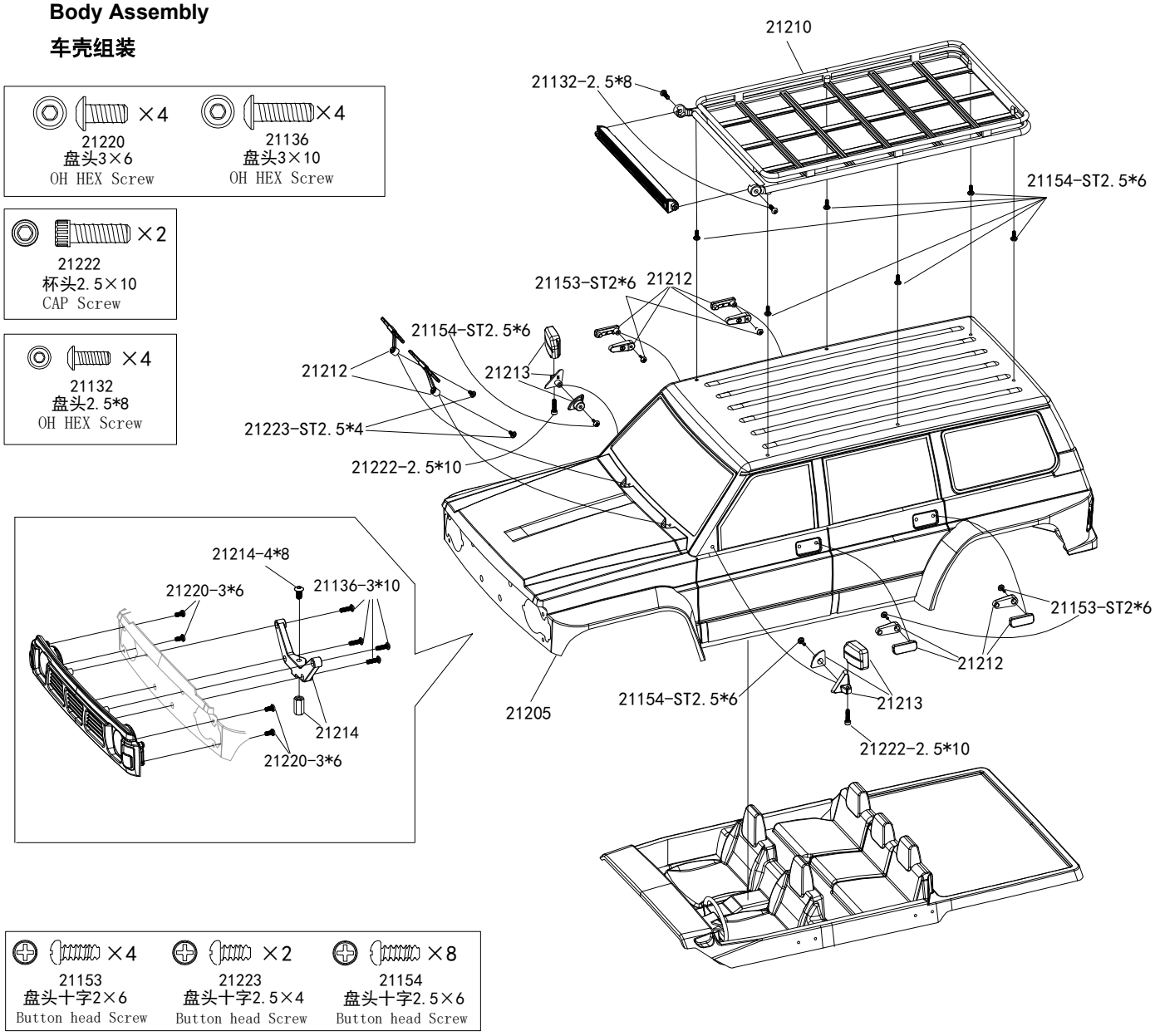

Body Assembly
车壳组装

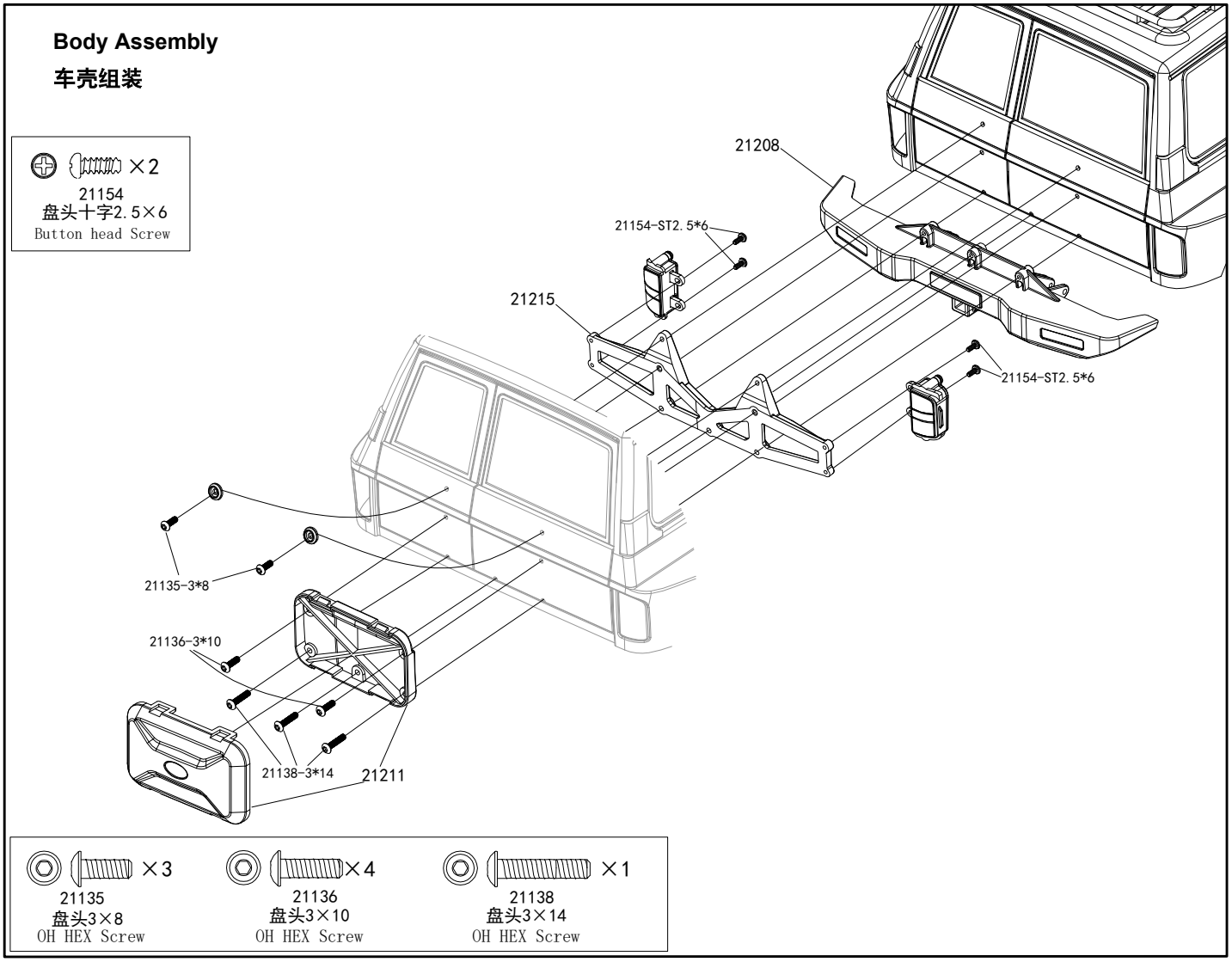

Footboard Assembly
轮胎组装

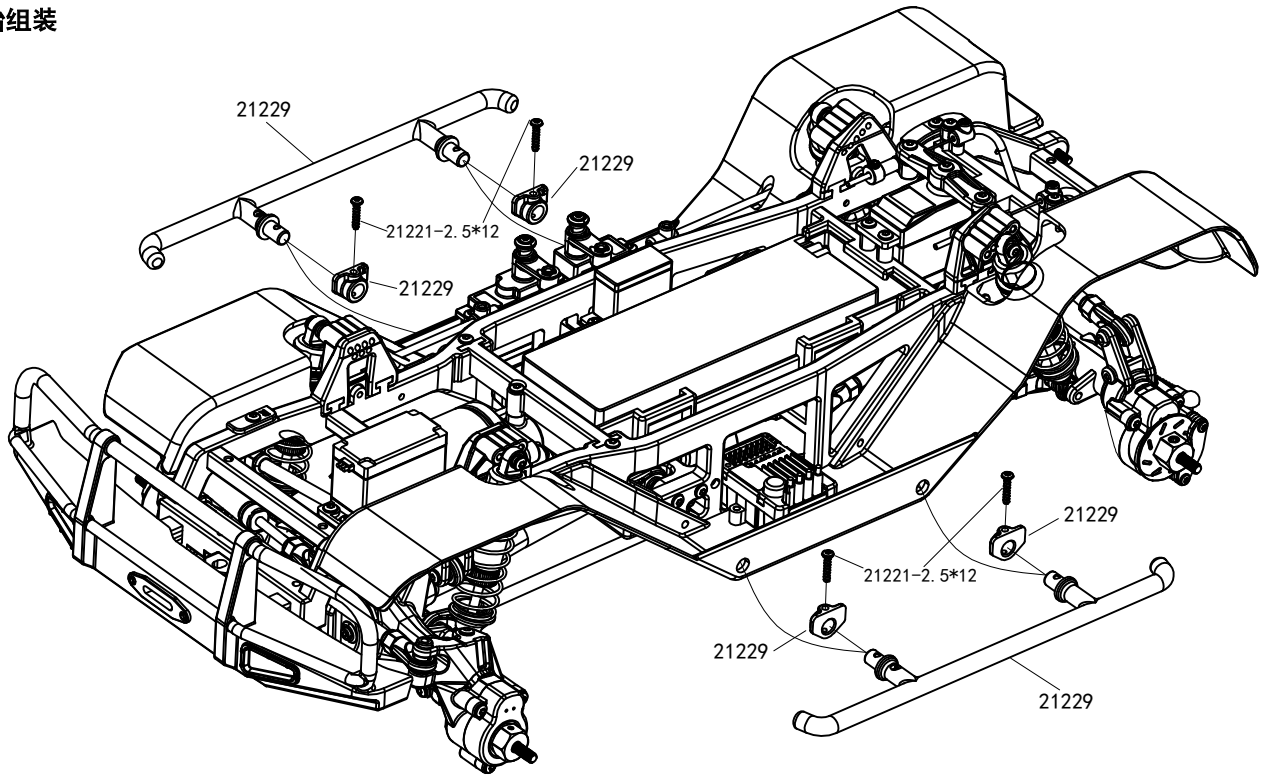

Tires Assembly
轮胎安装

×4
21128
M4尼龙螺母 Lock NUT

21228
21128
21099
21099
21227
GLUE
21228
两侧都需上胶
Glue on both sides

Body Assembly
车壳组装

21204
21138-3*14
21151-3*14
21011
×2
21151
杯头3×14
CAP Screw

配件表
Parts List

21000

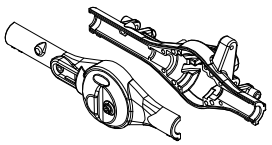

前桥管
Front Portal Housing

21001

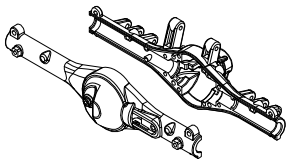

后桥管
Rear Portal Housing

21002

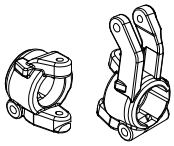

C座
C Hub set

21003

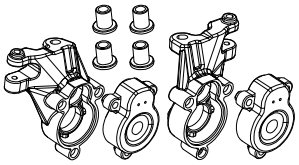

转向座左/右
Spinde Lefs/Right

21004

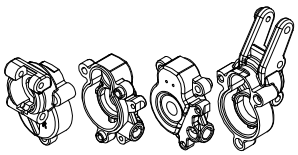

后轮轴座
Rear Hub

21005

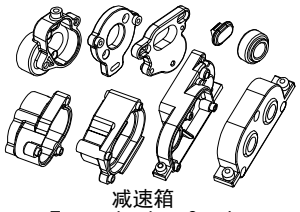

减速箱
Transmission Gearbox

21006

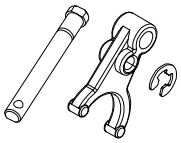

高低速拨叉
Speed Conversion Paddles

21007

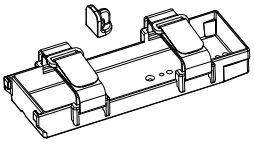

电池盒
Battery Case

21008

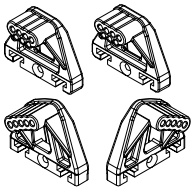

避震架
Shock Absorber Mount

21009

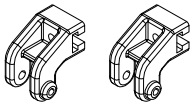

止推杆固定座
Panhard Bar Mount

21011

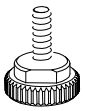

车壳固定螺帽
Body Shell fixing bolt

21012

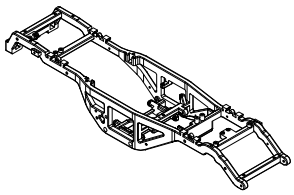

大梁
Chassis Frame

21013

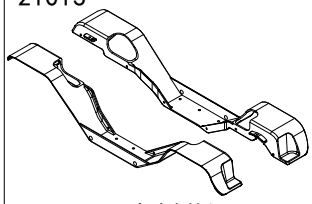

左右侧板
Left and Right Guard Board

21014

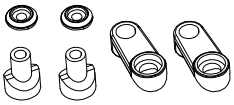

差速锁伺服臂组
Differential lock Servo Horn set

21015

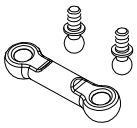

高低速球头拉杆
High-Low speed pull rod link

21016

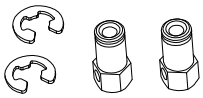

拉线固定座
Differential Lock Wire Fixed Post

21017

舵保弹簧
Servo Saver Spring

21018

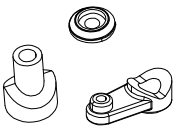

高低速伺服臂
High-Low Speed Servo Horn

21019

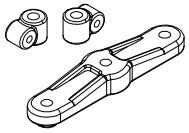

后刹车伺服臂
Rear Brake Servo Horn

21020

转向伺服臂25T
Steering Servo Horn 25T

21021

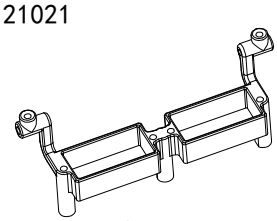

差速锁舵机座
Differential Lock Servo Mount

21024

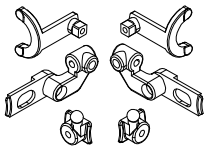

差速锁配件组
Differential Lock Accessory set

21025

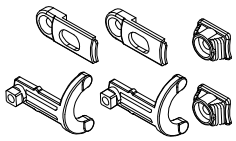

手动差速锁配件组
Hand Diff Lock Accessory set

21026

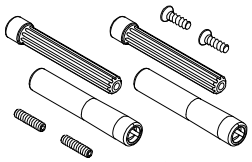

纵万向轴
Plastic Vetical Universal Shdft

配件表
Parts List

21027

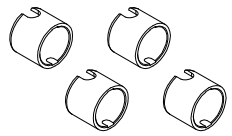

纵万向轴套
Center Universal Drive shaft Bushing

21028

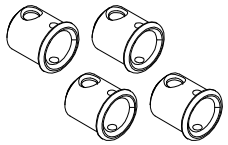

纵万向接杯
Center Universal Drive Cup

21029

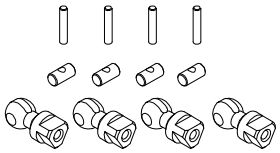

纵万向接头
Center Universal Joint Coupler

21030

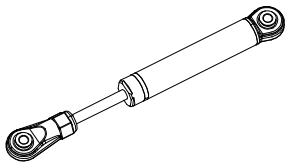

转向减震器
Steerung Shock Absorber

21031

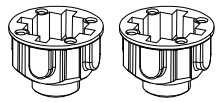

差速壳
Differential Case

21032

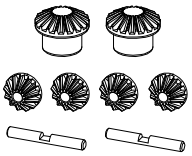

差速齿轮组18T/13T
Differential Gears

21033

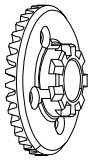

从动齿轮34T
34T Gear

21034

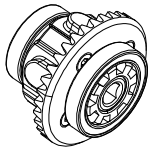

差速器
Differential Set

21035

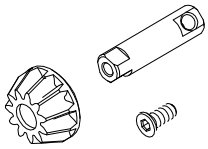

主动齿轮11T
11T Gear

21036

差速锁块
Differential Lock Mounting

21038

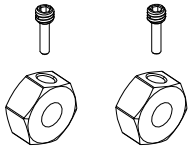

六角轮座-前
Front Wheel Hex

21039

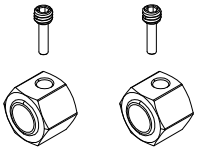

六角轮座-后
Rear Wheel Hex

21040

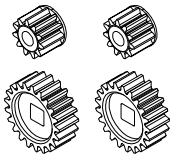

门桥齿轮11T/21T
Portal Axle Gears 11T/21T

21041

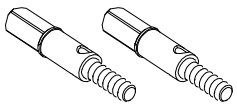

输出轮轴-前
Front Portal Axle Output Shaft

21042

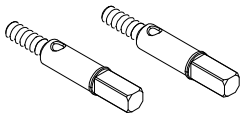

输出轮轴-后
Rear Portal Axle Output Shaft

21043

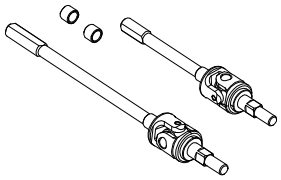

横万向传动轴
Horizontal Universal Shaft

21044

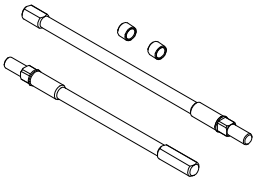

后直轴
Rear Straight Axle Shaft

21045

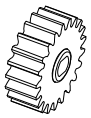

波箱齿轮21T-M1.0（扁孔）
Gearbox 21T Gear

21046

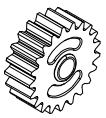

波箱齿轮21T-M1.0（圆孔）
Gearbox 21T Gear

21047

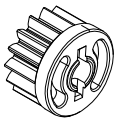

波箱齿轮15T-M1.0
Gearbox 15T Gear

21048

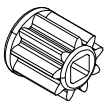

波箱齿轮9T-M1.0
Gearbox 9T Gear

21049

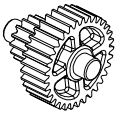

波箱齿轮33T/15T-M0.6
Gearbox 33T/15T Gear

21050

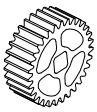

波箱齿轮31T-M0.6
Gearbox 31T Gear

21051

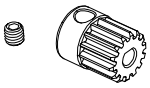

马达齿14T-M0.6
14T pinion Gear

配件表
Parts List

21052

高低速换挡锁块
Speed Conversion Lock Block

21053

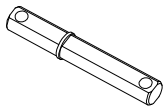

波箱输出轴
Gearbox Output Shaft

21054

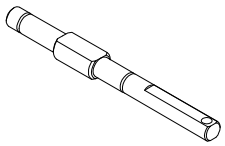

波箱变速轴
Gearbox speed shift shaft

21055

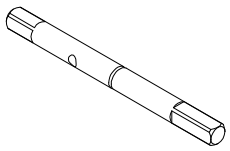

波箱二级减速轴
Gearbox Secondary Reduction Shaft

21056

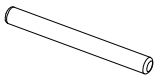

波箱销子3*28
Pins for Gearbox 3*28

21083

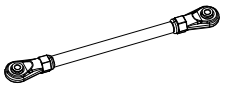

上拉杆-70mm
Camber Link

21084

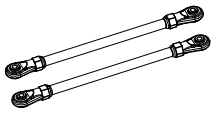

止推杆-90mm
Sway Bar

21085

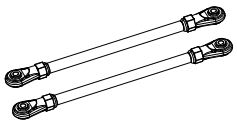

前下拉杆-85mm
Linkage front lower

21086

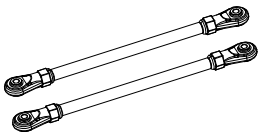

后下拉杆-83mm
Linkage rear upper

21087

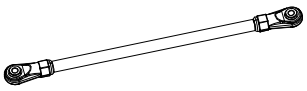

转向拉杆-109mm
Steering Linkage

21088

伺服拉杆
Servo Linkage

21089

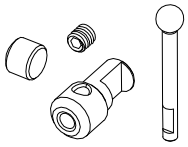

刹车凸轮轴组
Brake Cam Shaft Set

21090

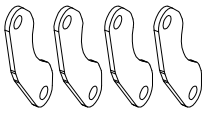

刹车夹片
Brake Pad Plates

21091

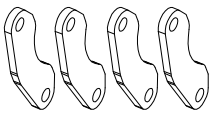

刹车摩擦片
Brake Pad

21092

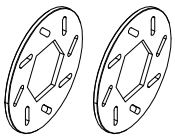

刹车碟
Brake Dis

21093

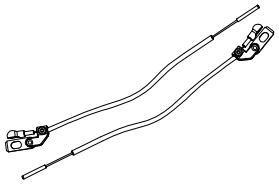

差速锁拉线组
Differntial Lock Wiresf

21094

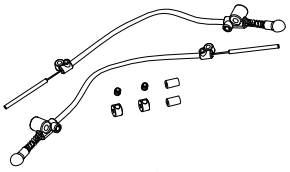

后刹车拉线
Rear Brake Cable

21095

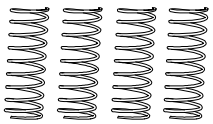

避震弹簧
Shock Absorber Springs

21096

避震轴
Shock Absorber Shaft

21097

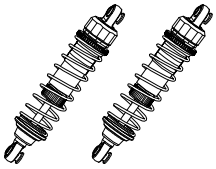

避震器组
Shock Absorber Set

21099

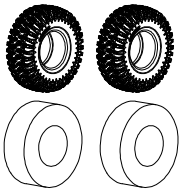

轮胎皮/海绵
Tires/Foams

21107

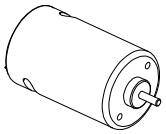

550碳刷马达
Brushed Motor

21110

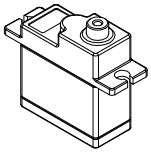

17G舵机
Servo

21111

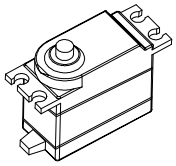

15KG舵机
Servo

配件表
Parts List

21112

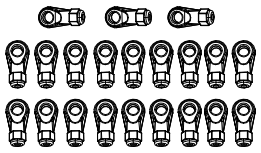

拉杆球头座组
Ball Linkage Ends

21113

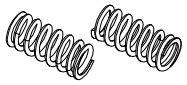

转减弹簧
Steering Shock Spring

21114

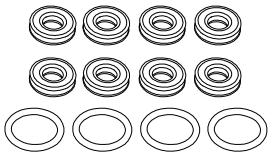

避震器密封圈
Shock Absorber Seal O-Ring X-Ring

21174

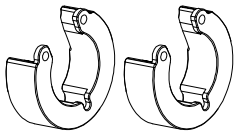

前桥配重
Front Axle Counterweight

21175

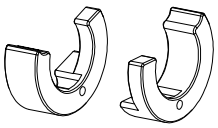

后桥配重
Rear Axle Counterweight

21176

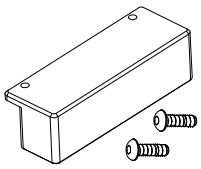

大梁前后配重
Chassis Beam F/R Counterweights

21178

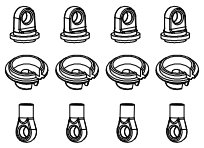

避震配件包
Shock parts pack

21179

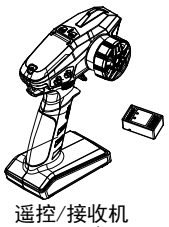

遥控/接收机
Transmitter/Receiver

21180

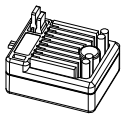

电调60A
ESC 60A

21181

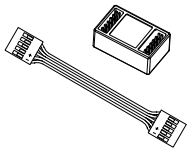

灯控盒
Light Control Boox

21200

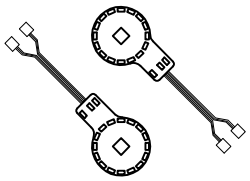

大灯板(PH2.0插头)
Headlight Board

21201

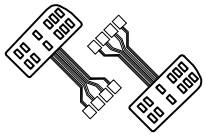

尾灯板(PH2.0插头)
Taillight Board

21202

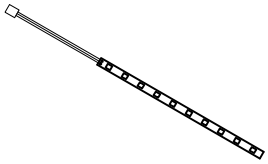

顶灯板(PH2.0插头)
Roof Light Board

21203

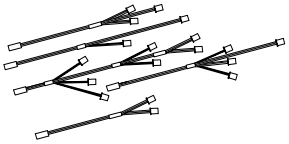

全车灯线组(PH2.0插头)
Lights Wiring Harness set

21204

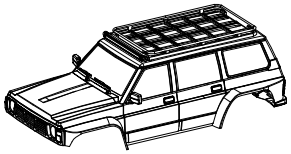

车壳组
Body Assembly

21205

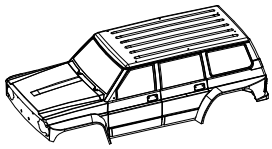

车壳
Body Shell

21206

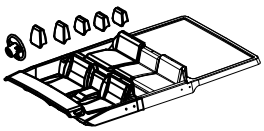

驾驶舱
Cockpit Interior

21207

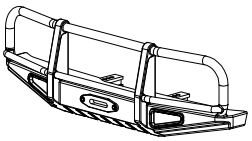

前防撞架
Front Bumper

21208

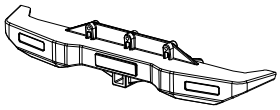

后防撞架
Rear Bumper

21209

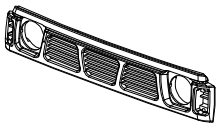

车壳中网
Body Front Mesh Grille

21210

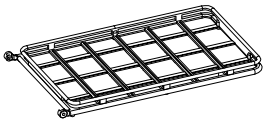

车顶行李架
Roof Rack

21211

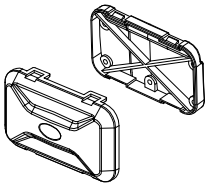

尾行李箱
Tailgate Storage Box

21212

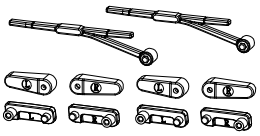

车壳配件组
Body Hardware parts

21213

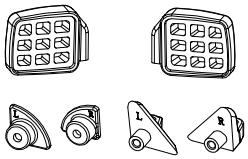

后视镜
Rear view mirror

配件表
Parts List

21214

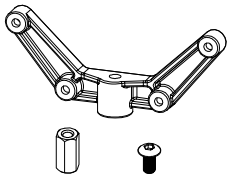

车壳前固定架
Front Body Bracket

21215

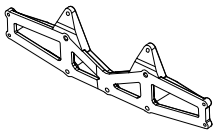

车壳后支撑
Body Rear Support

21216

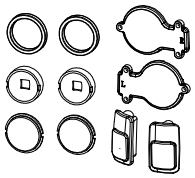

大灯组
Headlight bucket set

21217

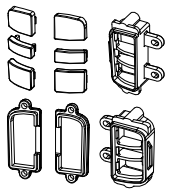

尾灯组
Taillight bucket set

21218

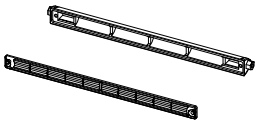

车顶灯
Roof Light

21219

车壳螺丝垫片
Screw washer for body

21225

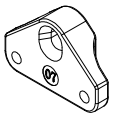

车壳固定座
Mount for body

21226

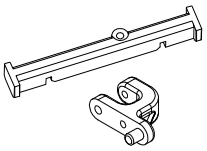

大梁支撑
Chassis Frame Support

21227

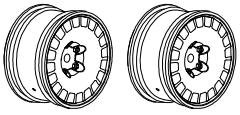

轮框
Gray Rims

21228

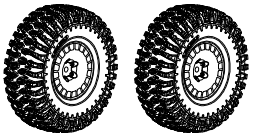

轮胎组
Wheels

21229

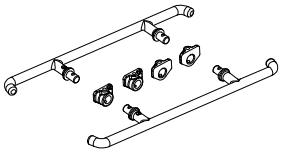

脚踏
footboard

21116

球头5.8-7.4
Hollow Steel Pivot Balls 5.8-7.4

21117

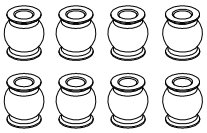

球头6.8-7.4
Hollow Steel Pivot Balls 6.8-7.4

21118

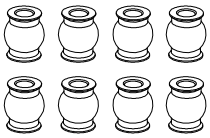

球头6.8-7.9
Hollow Steel Pivot Balls 6.8-7.9

21119

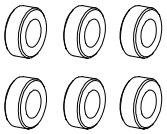

轴承5*10*4
Ball Bearing

21120

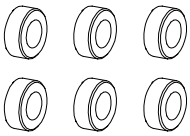

轴承5*11*4
Ball Bearing

21121

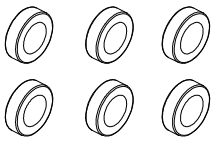

轴承6*12*4
Ball Bearing

21122

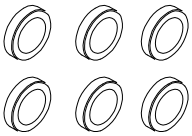

轴承12*18*4
Ball Bearing

21123

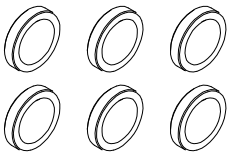

轴承15*21*4
Ball Bearing

21124

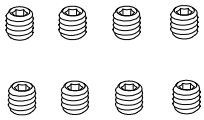

机米4*4
Headless Screws

21125

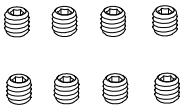

机米3*3
Headless Screws

21126

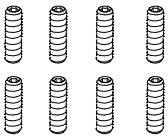

机米3*14
Headless Screws

21127

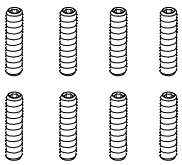

机米3*20
Headless Screws

配件表
Parts List

21128

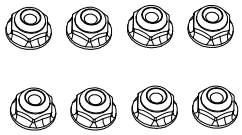

M4法兰螺母
Flange Lock Nuts

21129

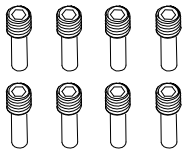

螺丝轴M4-12.5
Screw Axle

21130

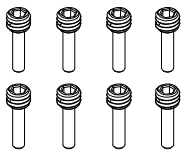

螺丝轴M4-11.5
Screw Axle

21131

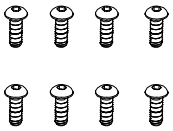

盘头内六角螺丝M2*6
Button Head Screws

21132

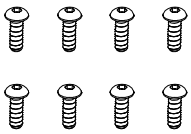

盘头内六角螺丝M2.5*8
Button Head Screws

21133

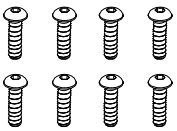

盘头内六角螺丝M2.5*10
Button Head Screws

21134

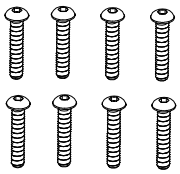

盘头内六角螺丝M2.5*16
Button Head Screws

21135

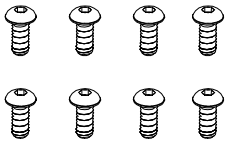

盘头内六角螺丝M3*8
Button Head Screws

21136

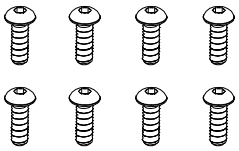

盘头内六角螺丝M3*10
Button Head Screws

21137

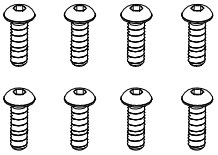

盘头内六角螺丝M3*12
Button Head Screws

21138

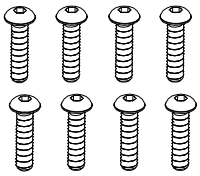

盘头内六角螺丝M3*14
Button Head Screws

21139

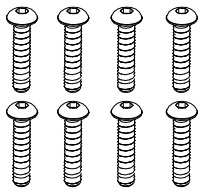

盘头内六角螺丝M3*16
Button Head Screws

21140

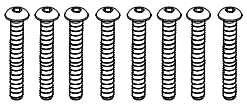

盘头内六角螺丝M3*20
Button Head Screws

21141

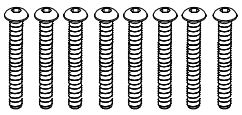

盘头内六角螺丝M3*26
Button Head Screws

21142

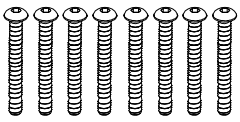

盘头内六角螺丝M3*28
Button Head Screws

21143

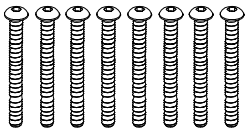

盘头内六角螺丝M3*32
Button Head Screws

21144

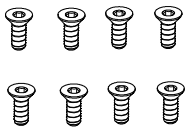

平头内六角螺丝M2.5*6
Flat Head Screws

21145

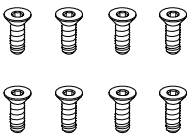

平头内六角螺丝M2.5*8
Flat Head Screws

21146

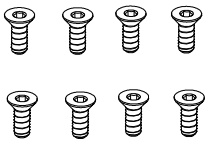

平头内六角螺丝M3*8
Flat Head Screws

21147

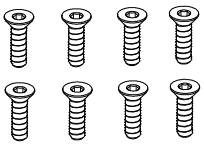

平头内六角螺丝M3*10
Flat Head Screws

21148

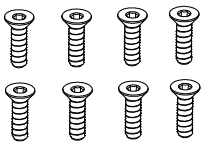

平头内六角螺丝M3*12
Flat Head Screws

21149

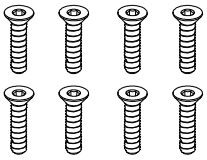

平头内六角螺丝M3*16
Flat Head Screws

21150

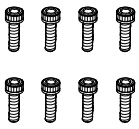

杯头内六角螺丝M2.5*8
Cap Head Screws

21151

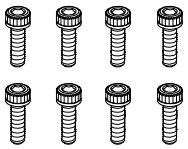

杯头内六角螺丝M3*14
Cap Head Screws

配件表
Parts List

21152 杯头内六角螺丝M4*40 Cap Head Screws	21153 盘头十字自攻牙螺丝ST2*6 Button head Self-tapping screws	21154 盘头十字自攻牙螺丝ST2.5*6 Button head Self-tapping screws	21155 盘头十字自攻牙螺丝ST2.5*8 Button head Self-tapping screws
21156 盘头十字自攻牙螺丝ST3*6 Button head Self-tapping screws	21157 盘头十字自攻牙螺丝ST3*8 Button head Self-tapping screws	21158 盘头十字自攻牙螺丝ST3*10 Button head Self-tapping screws	21159 垫片8*5.1*0.2 Shims
21160 垫片8*3.1*0.5 Shims	21161 3.0E扣 E Clip	21162 4.0E扣 E Clip	21163 2*10销子 Pins
21164 2*11销子	21165 盘头内六角螺丝M2*4 Button Head Screws	21166 盘头内六角螺丝M3*30 Button Head Screws	21220 盘头内六角螺丝M3*6 Button Head Screws
21221 盘头内六角螺丝M2.5*12 Button Head Screws	21222 杯头内六角螺丝M2.5*10 Cap Head Screws	21223 盘头十字自攻牙螺丝ST2.5*4 Button head Self-tapping screws	21224 盘头十字自攻牙螺丝ST2.5*12 Button head Self-tapping screws

TEAM RACING

YIKONG

Website:www.yikong.racing