MST
max SPEED TECHNOLOGY

FXX-D S

1 / 10 DRIFT CHASSIS

EXPLODED MANUAL

ON ROAD USE ONLY
FULL BALL BEARINGS

WHEELBASE :	STANDARD 257mm (adjustable)
WIDTH :	STANDARD 190mm (adjustable)
GEAR RATIO :	2.12 (36T/17T)
CASTER :	8 degrees variableness

www.rc-mst.com

※SPECIFICATION ARE SUBJECT TO CHANGE WITHOUT NOTICE

FXX-D S

1 / 10 DRIFT CHASSIS

EXPLODED VIEW

Please add color remark for ( ) part number.
e.g. 210123R for Red (210123)
請增加顏色標示在 ( ) 編號
例: 210123R for 紅色 (210123)

Color 顏色	Remark 標示
Red 紅	R
Silver 銀	S

MST max speed technology

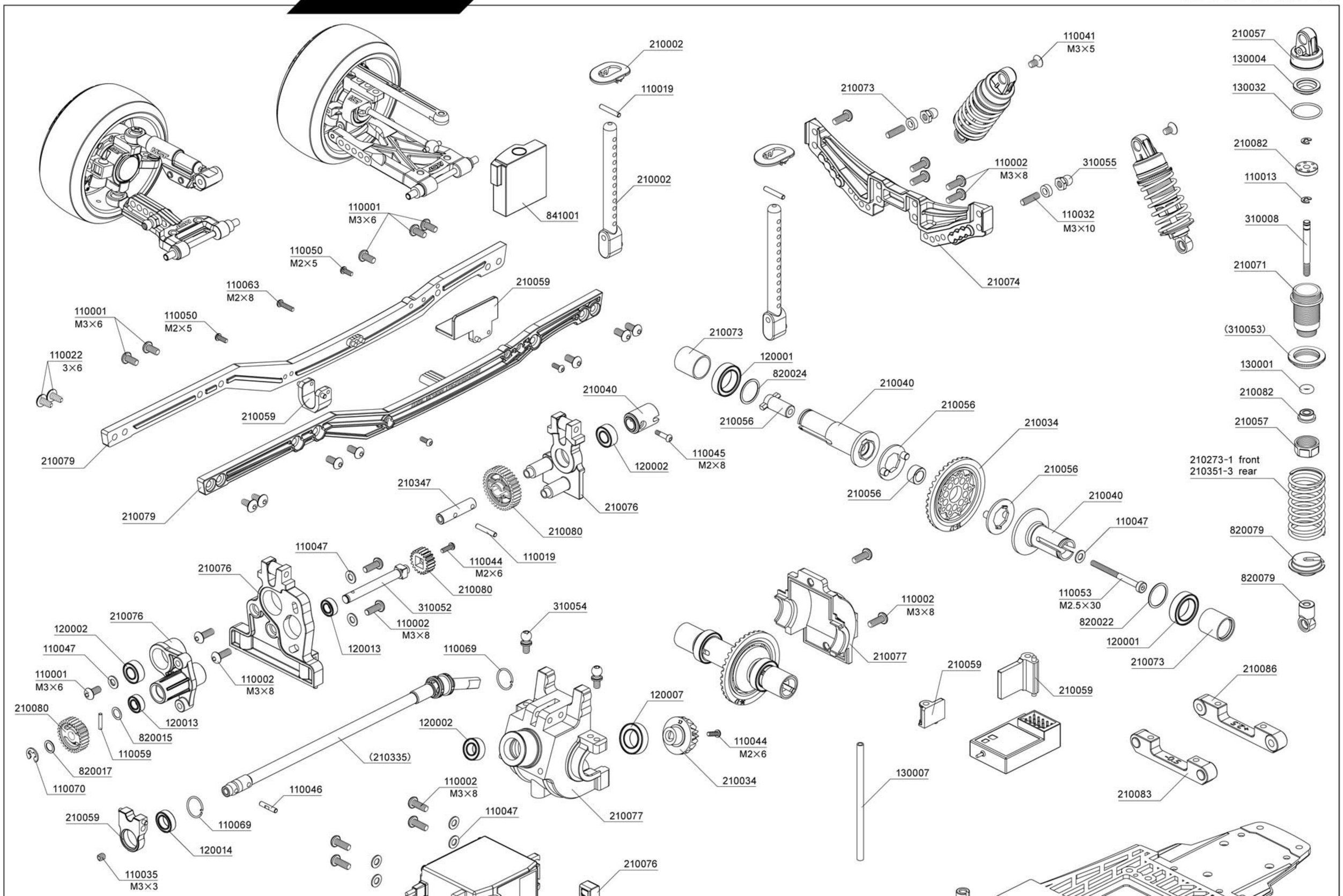

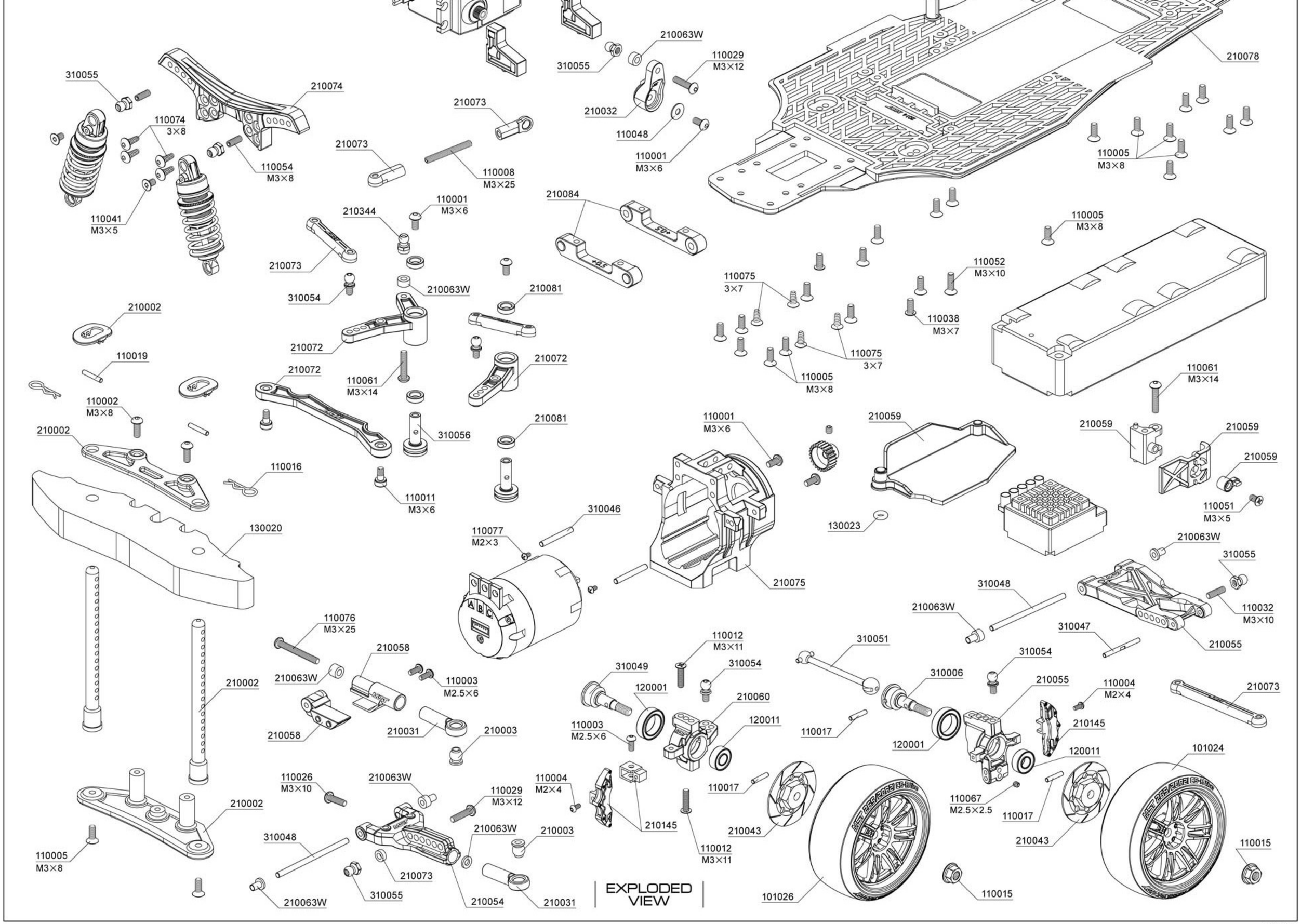

310055
210074
110074
3×8
110054
M3×8
110041
M3×5
210073
210073
110008
M3×25
210063W
310055
110029
M3×12
210032
110048
110001
M3×6
210078
110005
M3×8
210084
110001
M3×6
210344
210073
310054
210063W
210081
210002
210072
110019
210072
110061
M3×14
210072
110002
M3×8
210002
310056
210081
110016
110011
M3×6
110005
M3×8
110052
M3×10
110075
3×7
110038
M3×7
110075
3×7
110005
M3×8
110061
M3×14
110001
M3×6
210059
210059
210059
210059
110051
M3×5
130020
310046
110077
M2×3
130023
210075
210063W
310055
310048
110032
M3×10
210063W
310047
210055
110076
M3×25
210058
210063W
110003
M2.5×6
210002
210058
210031
210003
110012
M3×11
310049
310054
120001
210060
110003
M2.5×6
120011
310051
310054
310006
210055
110004
M2×4
210073
110017
120001
210145
120011
101024
110026
M3×10
210063W
110029
M3×12
110004
M2×4
210002
210145
110017
110067
M2.5×2.5
110017
210043
210043
110015
310048
210063W
210003
110012
M3×11
110005
M3×8
210073
310055
210063W
210054
210031
EXPLODED
VIEW
101026
110015

PARTS

M2×4 Screw ×4
圓頭螺絲
110004

M2×5 Screw ×4
圓頭螺絲
110050

M2×6 Screw ×2
圓頭螺絲
110044

M2.5×6 Screw ×6
圓頭螺絲
110003

M3×6 Screw ×16
圓頭螺絲
110001

M2×8 Screw ×1
圓頭螺絲
110063

M3×8 Screw ×18
圓頭螺絲
110002

M3×10 Screw ×2
圓頭螺絲
110026

M3×12 Screw ×3
圓頭螺絲
110029

M3×14 Screw ×2
圓頭螺絲
110061

M3×25 Screw ×2
圓頭螺絲
110076

M2×8 Screw ×1
圓頭螺絲(半牙)
110045

3×6 Screw ×4
自攻圓頭螺絲
110022

3×8 Screw ×4
自攻圓頭螺絲
110074

2.6×10 Screw ×1
自攻圓頭螺絲
110025

M3×5 Screw ×1
十字扁頭螺絲
110051

M3×7 Screw ×2
十字扁頭螺絲
110038

M3×11 Screw ×4
十字扁頭螺絲
110012

M2.5×2.5 Screw ×2
止付螺絲
110067

M3×3 Screw ×2
止付螺絲
110035

M3×8 Screw ×2
止付螺絲
110054

M3×10 Screw ×4
止付螺絲
110032

M3×25 Screw ×1
止付螺絲
110008

M3×5 Screw ×4
沉頭螺絲
110041

M3×8 Screw ×21
沉頭螺絲
110005

M3×10 Screw ×3
沉頭螺絲
110052

3×7 Screw ×4
自攻沉頭螺絲
110075

M3×6 Screw ×2
有頭螺絲(半牙)
110011

M2.5×30 Screw ×1
有頭螺絲(半牙)
310032

1.5×7.8 Shaft ×1
插銷
110059

2×9.8 Shaft ×6
插銷
110017

2×9.8 Shaft ×1
插銷(剖槽)
110046

2×11.8 Shaft ×5
插銷
110019

2.5×20 Arm shaft ×2
擺臂插銷
310046

2×22 Shaft ×2
擺臂插銷(剖溝)
310047

2.5×46 Arm shaft ×4
擺臂插銷
310048

M4 Wheel nut ×4
輪框螺帽
110015

6.0 R-clip ×7
R形扣
110016

M2×3 Screw ×2
十字螺絲
110077

4×6×0.1 Spacer ×1
墊片
820015

4×6×0.3 Spacer ×1
墊片
820017

3×6×0.5 Spacer ×8
墊片
110047

3×8×0.5 Spacer ×1
墊片
110048

5×8×2.5 Spacer ×4
墊片
210081

10×12×0.1 Spacer ×1
墊片
820022

10×12×0.3 Spacer ×1
墊片
820024

4.8×4.5 Copper ball connector ×8
銅製球頭螺絲
310054

4.8 Copper hex ball ×9
銅製外六角球頭
310055

4.8 Ball connector L ×1
外六角球頭（長）
210344

5.8 Ball connector ×4
球頭
210003

Drive gear shaft ×1
驅動齒軸
310052

Gear C shaft ×1
終齒軸
210347

3.0 E-Clip ×1
E型扣
110070

G9 G-Clip ×2
G型扣
110069

Coil spring 29mm (silver) ×2
避震彈簧 29mm (銀)
210273-1

Soft coil spring 29mm (red) ×2
軟避震彈簧 29mm (紅)
210351-3

Damper cylinder ×4
避震筒身
210071

Piston rod ×4
避震軸心
310008

Piston ×4
避震活塞
210082

Spring retainer ×4
避震器調整環
(310053)

10.8×0.9 O-ring ×4
O環
130032

P3 Damper O-ring (red) ×4
避震器O環(紅)
130001

Cylinder cap ×4
避震器上蓋
210057

E-clip ×10
E形扣
110013

Oil seal ×4
避震器氣室
130004

Rod guide cap ×4
避震器下蓋
210057

Rod guide ×4
避震器下蓋墊片
210082

Damper retainer ×4
避震器彈簧座
820079

Damper retainer ×4
避震器拉桿
820079

PARTS

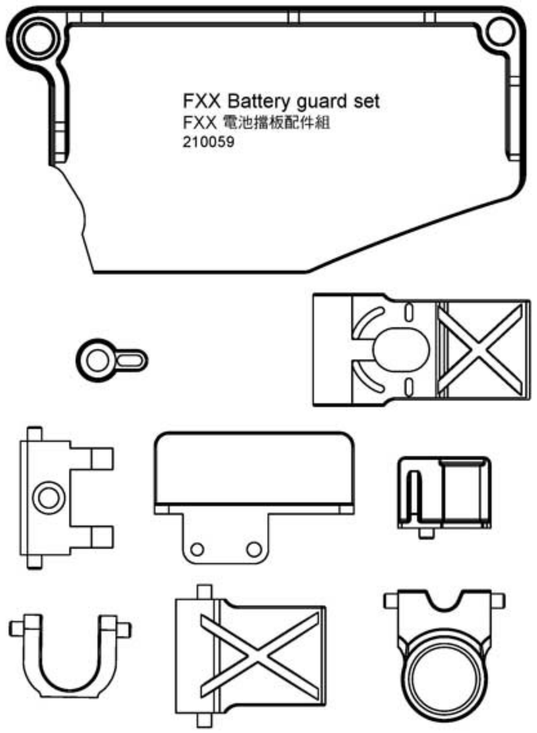

FXX Battery guard set
FXX 電池擋板配件組
210059

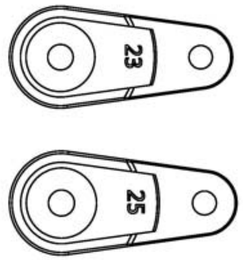

Servo horn set (25T/23T) ×1
伺服機舵片組 (25T/23T)
210032

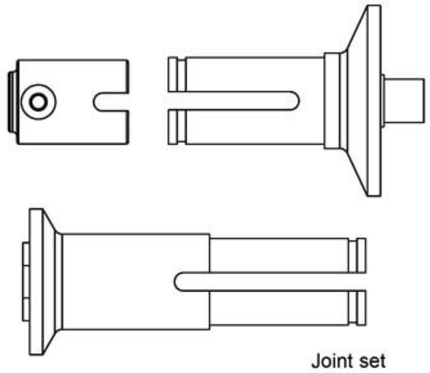

Joint set
接杯組
210040

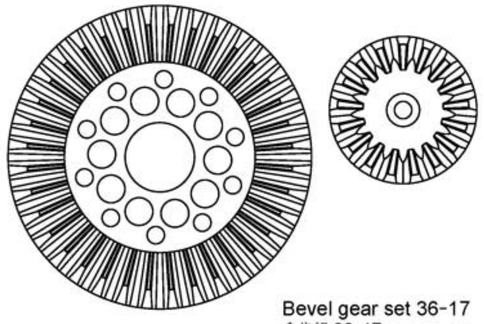

Bevel gear set 36-17
傘齒組 36-17
210034

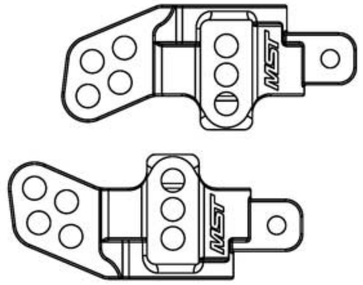

KPI Upright set
KPI 輪座組
210060

Lower arm mount +2.5 ×1
下擺臂座組 +2.5
210086

Lower arm mount +0.5 ×2
下擺臂座組 +0.5
210084

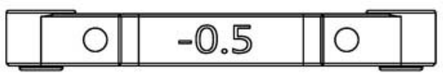

Lower arm mount -0.5 ×1
下擺臂座組 -0.5
210083

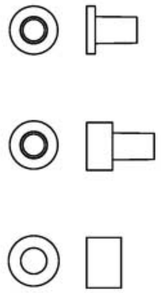

Shaft bush & spacer set (white)
襯套墊片組 (白)
210063W

4×8×3 ball bearing ×2
培林
120013

5×10×4 ball bearing ×3
培林
120002

6×10×3 ball bearing ×1
培林
120014

5×11×4 ball bearing ×4
培林
120011

8×14×4 ball bearing ×1
培林
120007

10×15 ball bearing ×6
培林
120001

O-ring P3 NBR ×1
O形環
130023

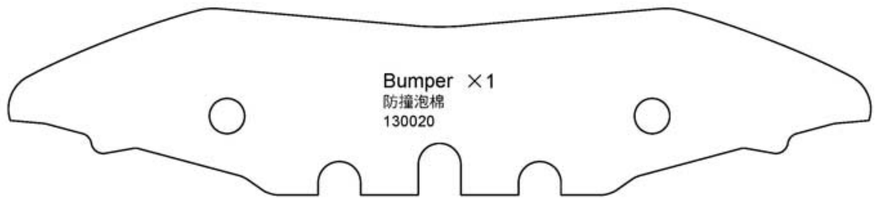

Bumper ×1
防撞泡棉
130020

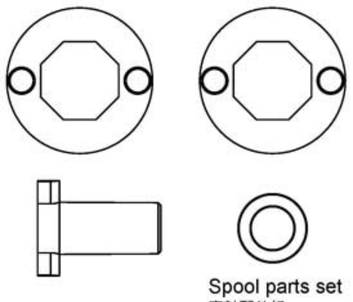

Spool parts set
直軸配件組
210056

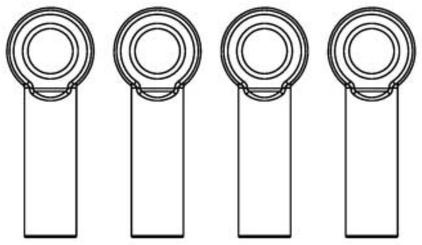

5.8×26 Reinforced adjuster set
強化拉桿頭組
210031

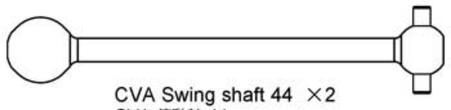

CVA Swing shaft 44 ×2
CVA 傳動軸 44
310051

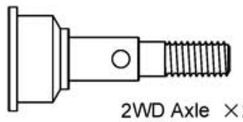

2WD Axle ×2
二驅輪軸
310049

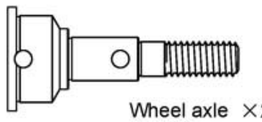

Wheel axle ×2
萬向接杯
310006

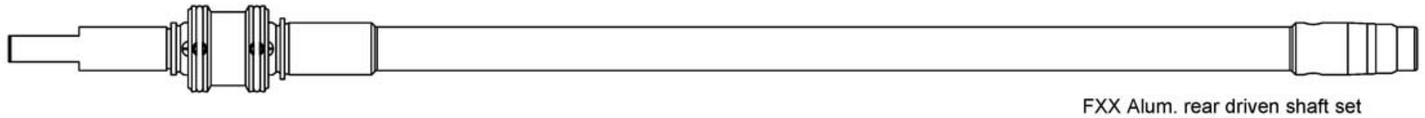

FXX Alum. rear driven shaft set
FXX 鋁合金雙節後軸組
(210335)

PARTS

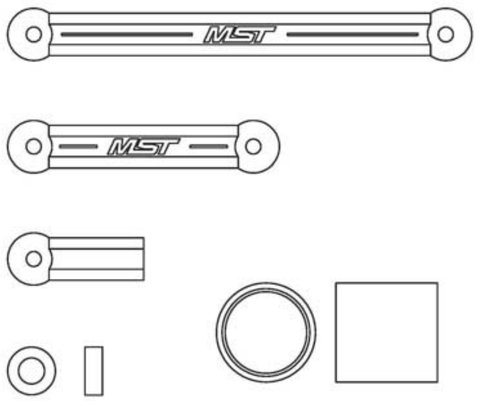

FXX Steering turnbuckle set ×2
FXX 轉向拉桿組
210073

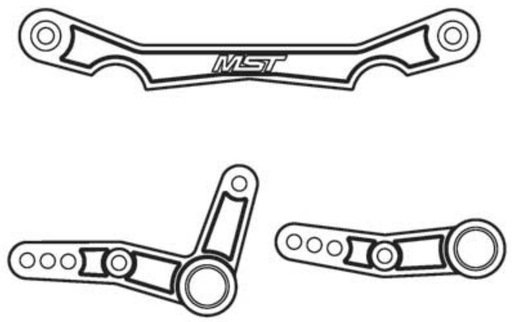

FXX Steering arm set
FXX 轉向搖臂組
210072

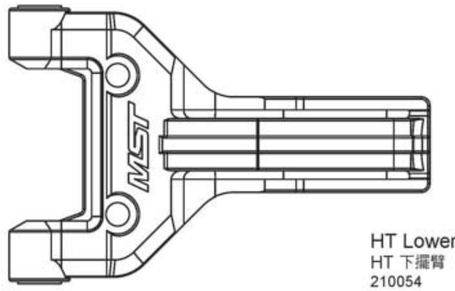

HT Lower arm ×2
HT 下擺臂
210054

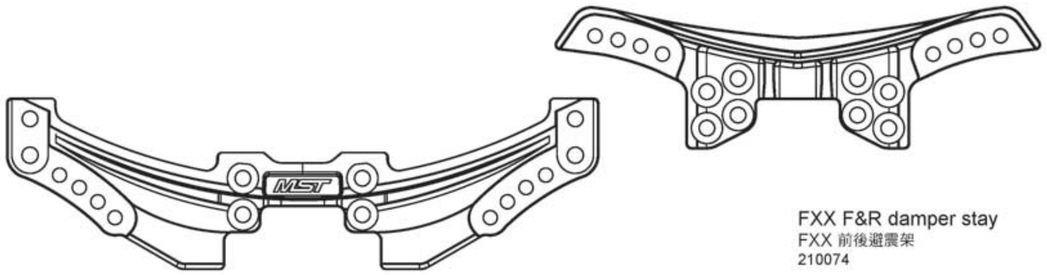

FXX F&R damper stay
FXX 前後避震架
210074

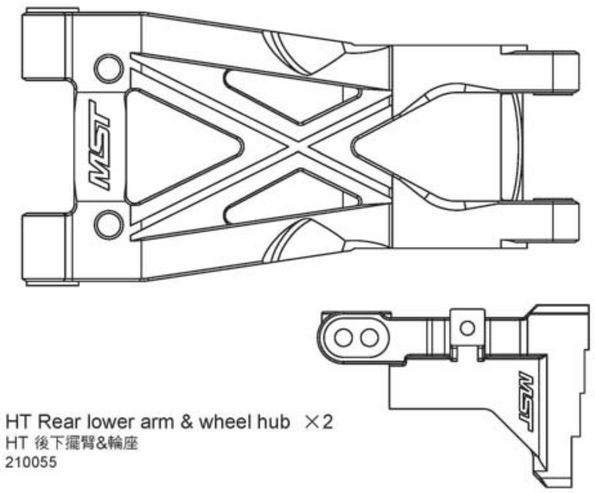

HT Rear lower arm & wheel hub ×2
HT 後下擺臂&輪座
210055

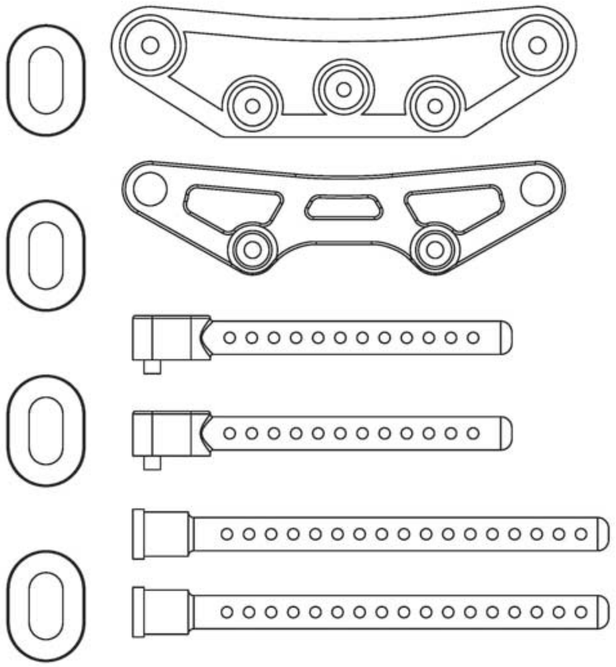

C PARTS - bumper set
C PARTS - 防撞板組
210002

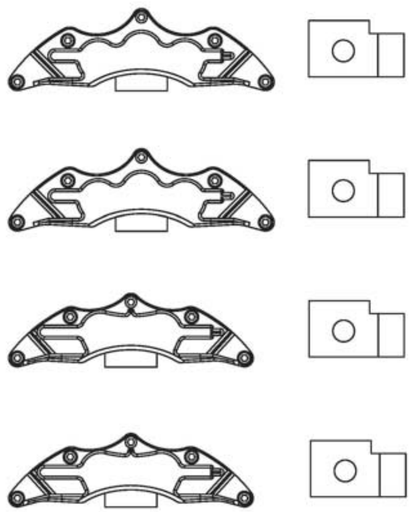

Brake calipers
煞車卡鉗
210145

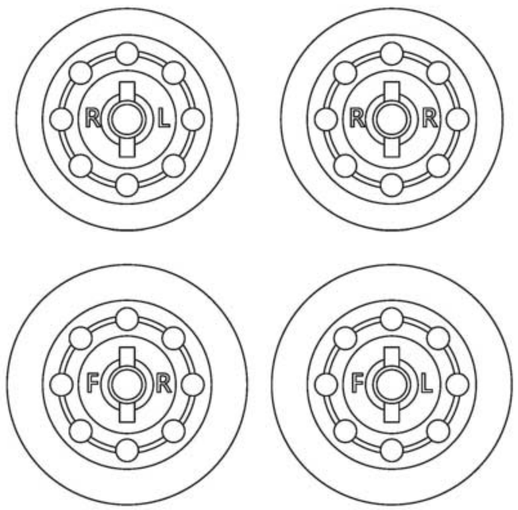

Wheel hubs w/disc shape
碟型六角輪座組
210043

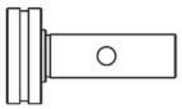

Steering arm post ×2
轉向搖臂支柱
210056

RE30 wheel
RE30 輪框
102022

101024	CS-R tire (soft) (4)	CS-R甩尾胎 (軟) (4)
101025	CS-R tire (medium) (4)	CS-R甩尾胎 (中) (4)
101026	CS-R tire (hard) (4)	CS-R甩尾胎 (硬) (4)
101027	CS-R tire (hardest) (4)	CS-R甩尾胎 (超硬) (4)
101028	CS-R tire (harder) (4)	CS-R甩尾胎 (高硬) (4)
101029	CS-R tire (HP) (4)	CS-R甩尾胎 (HP) (4)
101030	CS-R甩尾胎 (for carpet) (4)	CS-R甩尾胎 (地毯用) (4)

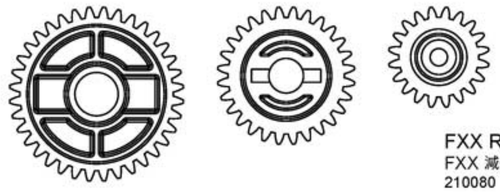

FXX Reduction gear set
FXX 減速齒組
210080

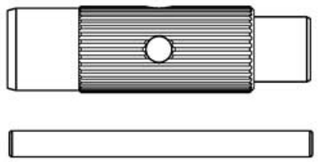

5.5 & 7.0 Alum. wrench
鋁合金套筒工具
(700003)

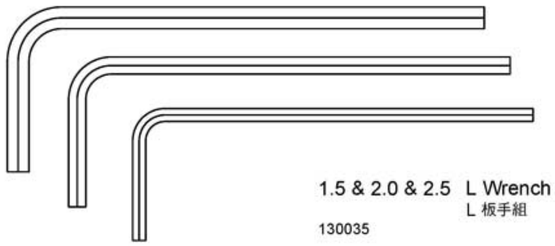

1.5 & 2.0 & 2.5 L Wrench set
L 板手組
130035

0.05" L Wrench
L 板手
110067

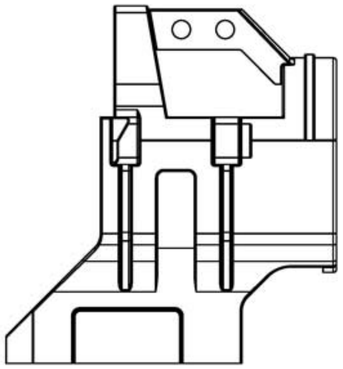

FXX Motor mount set
FXX 馬達座組
210075

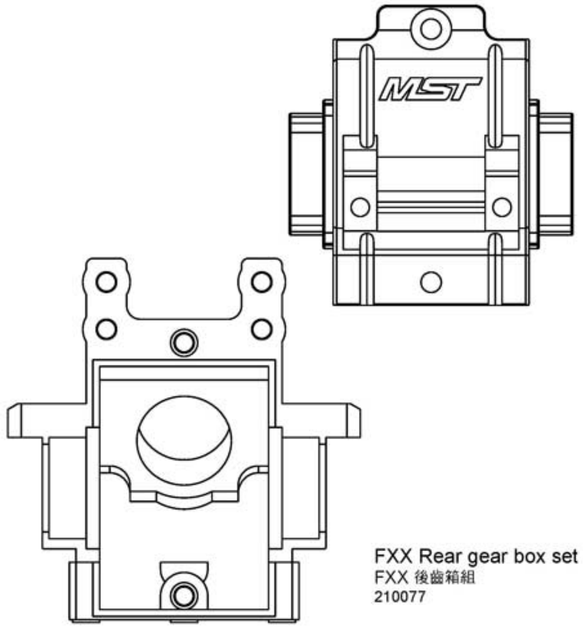

FXX Rear gear box set
FXX 後齒箱組
210077

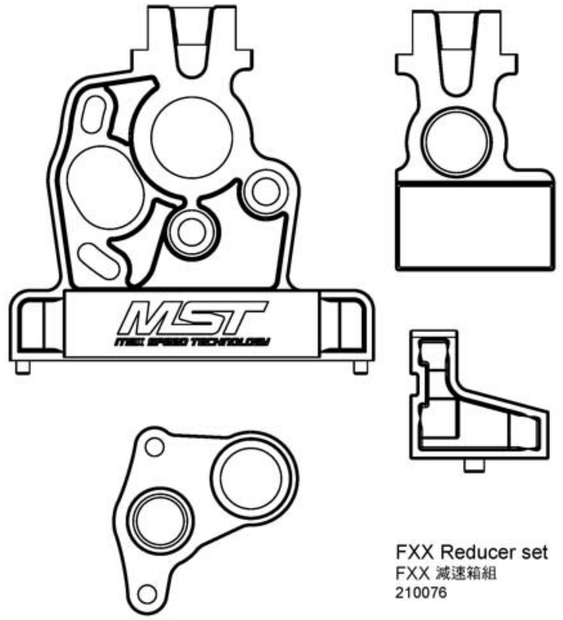

FXX Reducer set
FXX 減速箱組
210076

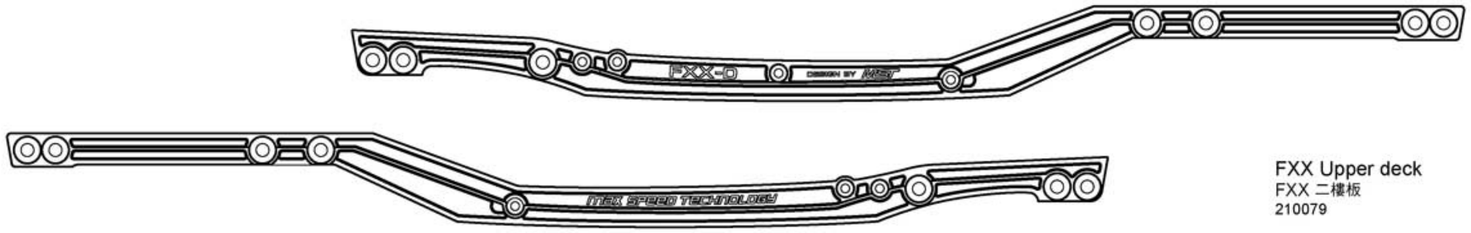

FXX Upper deck
FXX 二樓板
210079

Double sided tape
泡棉雙面膠
130006

20×80×1 Sponge
吸震泡棉
130034

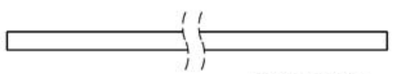

Inner sponge
吸震泡棉
130017

Antenna pipe
天線管
130007

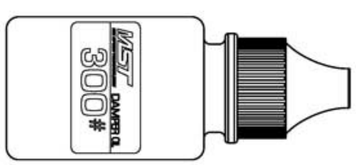

Damper oil #300
避震油
130009

Black grease
黑色油膏
130008

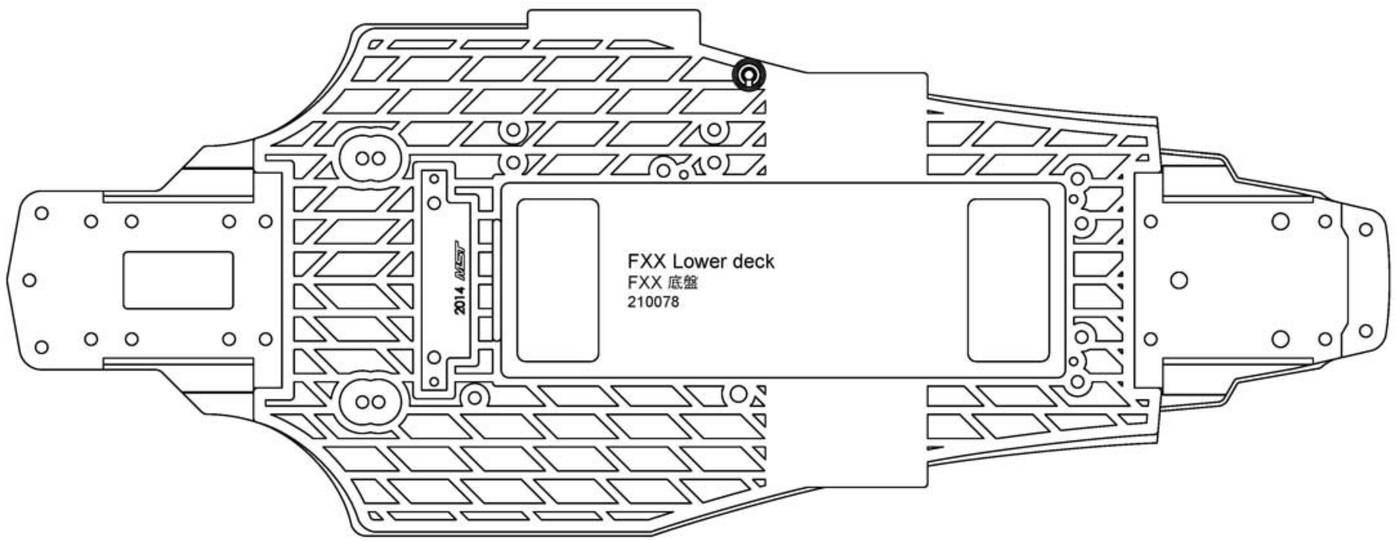

FXX Lower deck
FXX 底盤
210078

PARTS CODE

101024	CS-R tire (soft) (4)	110035	Set screw M3×3 (6)	120014	Ball bearing 6×10×3 (2)	210058	HT Upper arm	210344	Ball connector nut L 4.8 (4)
101026	CS-R tire (hard) (4)	110038	Flat head screw M3×7 (10)	130004	Oil seal (4)	210059	FXX Battery guard set	210347	FXX Drive gear shaft
102022SG	Silver grey RE30 wheel (+5) (4)	110041	Countersunk screw M3×5 (10)	130008	Black grease	210060	KPI Upright set	210351-3	Coil spring set 29mm (soft) (red) (2)
110001	Round head screw M3×6 (10)	110044	Round head screw M2×6 (6)	130009	Damper oil #300	210063W	Shaft bush & spacer set (white)	310006	Wheel axle (2)
110002	Round head screw M3×8 (10)	110045	Round head screw M2×8 (partial thread) (6)	130017	Inner sponge (8)	210071	Damper cylinder (2)	310008	Piston rod (4)
110003	Round head screw M2.5×6 (6)	110046	Shaft 2×9.8 (8)	130020	Bumper (B)	210072	FXX Steering arm set	310032	Diff. screw & spring set
110004	Round head screw M2×4 (6)	110047	Spacer 3×6×0.5 (8)	130023	O-ring P3 (black) (10)	210073	FXX Steering turnbuckle set	310046	Arm shaft 2.5×20 (2)
110005	Countersunk screw M3×8 (10)	110048	Spacer 3×8×0.5 (8)	130032	Damper cap O-ring (10)	210074	FXX F&R damper stay	310047	Arm shaft 2.0×22 (2)
110008	Set screw M3×25 (6)	110051	Flat head screw M3×5 (5)	130035	L Wrench set (1.5 & 2.0 & 2.5)	210075	FXX Motor mount set	310048	Arm shaft 2.5×46 (4)
110011	Cap screw M3×6 (6)	110052	Countersunk screw M3×10 (10)	130036	Tools	210076	FXX Reducer set	310049	2WD Axle (2)
110012	Flat head screw M3×11 (10)	110054	Set screw M3×8 (10)	210002	C PARTS-bumper set	210077	FXX Rear gear box set	310051	CVA Swing shaft 44 (2)
110013	E-clip 2.0 (10)	110059	Shaft 1.5×7.8 (8)	210003	D PARTS-ball connector	210078	FXX Lower deck	310052	FXX Drive gear shaft
110015	Flange nut M4 (4)	110061	Round head screw M3×14 (6)	210031	Reinforced adjuster set 5.8X26	210079	FXX Upper deck	310053	Spring retainer (2)
110016	R-clip 6.0 (10)	110063	Round head screw M2×8 (6)	210032	Servo horn set (23T/25T)	210080	FXX Reduction gear set	310054	Copper ball connector 4.8×4.5 (5)
110017	Shaft 2×9.8 (10)	110067	Set screw M2.5×2.5 (6)	210034	Bevel gear set 36-17	210081	Spacer 5×8×2.5 (4)	310055	Copper hex ball 4.8 (4)
110019	Shaft 2×11.8 (5)	110069	G-Clip 9.0 (10)	210040	Joint set	210083	Lower arm mount -0.5	310056	FXX Steering arm post
110022	Tapping round head screw 3×6 (6)	110070	E-Clip 3.0 (10)	210043	Wheel hubs w/disc shape	210084	Lower arm mount +0.5	820015	Spacer 4×6×0.1 (8)
110025	Tapping round head screw 2.6×10 (6)	110074	Tapping round head screw 3×8 (6)	210047	Reinforced adjuster set 4.8×18 (8)	210086	Lower arm mount +2.5	820017	Spacer 4×6×0.3 (8)
110026	Round head screw M3×10 (10)	110075	Tapping flat head screw 3×7 (6)	210054	HT Lower arm	210145	Brake calipers (4)	820024	Spacer 10×12×0.3 (8)
110029	Round head screw M3×12 (6)	110076	Round head screw M3×25 (6)	210055	HT Rear lower arm & wheel hub	210235	Piston spacer set	820079	Damper plastic maintenance set (2)
110030	Shaft 2×10 (10)	110077	Round head screw M2×3 (10)	210056	Spool parts set	210273-1	Coil spring 29mm (hard) (silver) (2)	841001	LSD-01 Gyro
110032	Set screw M3×10 (6)	120013	Ball bearing 4×8×3 (2)	210057	Damper cap set	210335R	FXX Alum. rear driven shaft set (red)		

OPTION PARTS CODE

(210142)	Alum. bumper support	210282	MST Diffuser	(210341)	FXX Alum. bearing holder	210387	FXX Carbon rear damper stay 3.5	(820048)	Wheel hub spacer 0.5 (4)
210145B	Brake calipers (blue) (4)	210288	XXX Reinforced bevel diff. assembly	(210352)	FXX Ball diff. set	210388	FXX Carbon steering joint plate 2.5	(820049)	Wheel hub spacer 1.0 (4)
210145R	Brake calipers (red) (4)	(210336)	FXX Alum. steering arm set	(210365)	FXX Reinforced propeller shaft set	210389	FXX Carbon lower deck 2.5	(820050)	Alum. spring retainer (4)
210205	DK Coil spring set 30mm	(210337)	FXX Alum. gear ration adjuster	210375	FXX Rear stabilizer set	210390	FXX Carbon upper deck 2.5	820052	Wheel weighting ring (2)
(210223)	XXX Alum. spool unit	(210338)	FXX Alum. reducer mount	210379	Rear bumper	(820039)	Alum. suspension mount (+2.5)	820057	Adjustable alum. suspension mount (-0.5-+1.0)
210266	Coil spring set 25mm (8)	(210339)	FXX Alum. reducer holder	(210384)	FXX Alum. rear gear box	820040	MST Balancing weights 10g	820058	Adjustable alum. suspension mount (+1.5-+3.0)
210273	Coil spring set 29mm (8)	(210340)	FXX Alum. motor mount set	210386	FXX Carbon front damper stay 3.5	820041	MST Balancing weights 30g	820059	Suspension mount spacer 0.2mm (10)

部品編號

101024	CS-R甩尾胎 (軟) (4)	110035	六角止付螺絲 M3×3 (6)	120014	培林 6×10×3 (2)	210058	HT 上擺臂	210344	球頭螺帽L 4.8 (4)
101026	CS-R甩尾胎 (硬) (4)	110038	十字扁頭螺絲 M3×7 (10)	130004	避震氣室 (4)	210059	FXX電池擋板配件組	210347	FXX 傳動齒輪軸
102022SG	銀灰RE30輪框 (+5) (4)	110041	六角沉頭螺絲 M3×5 (10)	130008	黑色油膏	210060	KPI 輪座組	210351-3	避震彈簧組 29mm (軟) (紅) (2)
110001	六角半圓頭螺絲 M3×6 (10)	110044	六角半圓頭螺絲 M2×6 (6)	130009	避震油 #300	210063W	襯套墊片組 (白)	310006	萬向接杯 (2)
110002	六角半圓頭螺絲 M3×8 (10)	110045	六角半圓頭螺絲 M2×8 (半牙) (6)	130017	吸震泡棉 (8)	210071	避震器筒身 (2)	310008	避震軸心 (4)
110003	六角半圓頭螺絲 M2.5×6 (6)	110046	插銷 2×9.8 (剖溝) (8)	130020	防撞泡棉 (B)	210072	FXX 轉向搖臂組	310032	滾差彈簧螺絲組
110004	六角半圓頭螺絲 M2×4 (6)	110047	墊片 3×6×0.5 (8)	130023	O環 P3 (黑) (10)	210073	FXX 轉向拉桿組	310046	擺臂插銷 2.5×20 (2)
110005	六角沉頭螺絲 M3×8 (10)	110048	墊片 3×8×0.5 (8)	130032	避震上蓋O環 (10)	210074	FXX 前後避震架	310047	擺臂插銷 2.0×22 (2)
110008	六角止付螺絲 M3×25 (6)	110051	十字扁頭螺絲 M3×5 (5)	130035	L 板手組 (1.5 & 2.0 & 2.5)	210075	FXX 馬達座組	310048	擺臂插銷 2.5×46 (4)
110011	六角有頭螺絲 M3×6 (半牙) (6)	110052	六角沉頭螺絲 M3×10 (10)	130036	工具包	210076	FXX 減速箱組	310049	二驅輪軸 (2)
110012	十字扁頭螺絲 M3×11 (10)	110054	六角止付螺絲 M3×8 (10)	210002	C PARTS-防撞板組	210077	FXX 後齒箱組	310051	CVA傳動軸 44 (2)
110013	E扣 2.0 (10)	110059	插銷 1.5×7.8 (8)	210003	D PARTS	210078	FXX 底盤	310052	FXX 驅動齒軸
110015	凸緣螺帽 M4 (4)	110061	六角半圓頭螺絲 M3×14 (6)	210031	強化拉桿頭組 5.8×26	210079	FXX 二樓板	310053	避震器調整環 (2)
110016	R銷 6.0 (10)	110063	六角半圓頭螺絲 M2×8 (6)	210032	伺服機舵片組 (23T/25T)	210080	FXX 減速齒組	310054	銅製內六角公球頭 4.8×4.5 (5)
110017	插銷 2×9.8 (10)	110067	六角止付螺絲 M2.5×2.5 (6)	210034	傘齒組 36-17	210081	墊片 5×8×2.5 (4)	310055	銅製外六角球頭 4.8 (4)
110019	插銷 2×11.8 (5)	110069	G扣 9.0 (10)	210040	接杯組	210083	下擺臂座 -0.5	310056	FXX 轉向搖臂支柱
110022	自攻六角半圓頭螺絲 M3×6 (6)	110070	E扣 3.0 (10)	210043	碟型六角輪座組	210084	下擺臂座 +0.5	820015	墊片 4×6×0.1 (8)
110025	自攻六角半圓頭螺絲 2.6×10 (6)	110074	自攻六角半圓頭螺絲 3×8 (6)	210047	強化拉桿頭組 4.8×18 (8)	210086	下擺臂座 +2.5	820017	墊片 4×6×0.3 (8)
110026	六角半圓頭螺絲 M3×10 (10)	110075	自攻六角沉頭螺絲 3×7 (6)	210054	HT 下擺臂	210145	煞車卡鉗 (4)	820024	墊片 10×12×0.3 (8)
110029	六角半圓頭螺絲 M3×12 (6)	110076	六角半圓頭螺絲 M3×25 (6)	210055	HT 後下擺臂&輪座	210235	避震器活塞墊片組	820079	避震膠件包 (2)
110030	插銷 2×10 (10)	110077	十字半圓頭螺絲 M2×3 (10)	210056	塑膠直軸配件組	210273-1	避震彈簧 29mm (硬) (銀) (2)	841001	LSD-01 壓電陀螺儀
110032	六角止付螺絲 M3×10 (6)	120013	培林 4×8×3 (2)	210057	避震器上下蓋組	210335R	FXX 鋁合金雙節後軸組 (紅)		

改裝品編號

(210142)	鋁合金防撞板上蓋	210282	MST 後擾流板	(210341)	FXX 鋁合金二樓板培林架	210387	FXX 碳纖維後避震架 3.5	(820048)	輪座墊片 0.5 (4)
210145B	煞車卡鉗 (電鍍藍) (4)	210288	XXX 強化式傘齒總成組	(210352)	FXX 滾珠差速組	210388	FXX 碳纖維轉向連接板 2.5	(820049)	輪座墊片 1.0 (4)
210145R	煞車卡鉗 (電鍍紅) (4)	(210336)	FXX 鋁合金轉向搖臂組	(210365)	FXX 強化雙節後軸組	210389	FXX 碳纖維底盤 2.5	(820050)	鋁合金彈簧座 (4)
210205	DK避震彈簧組 30mm	(210337)	FXX 鋁合金齒比調整架	210375	FXX 後防傾桿組	210390	FXX 碳纖維二樓板 2.5	820052	輪框加重環 (2)
(210223)	XXX 鋁合金直軸組	(210338)	FXX 鋁合金減速箱座	210379	後防撞板	(820039)	鋁合金擺臂座 (+2.5)	820057	可調式鋁合金擺臂座 (-0.5-+1.0)
210266	避震彈簧組 25mm (8)	(210339)	FXX 鋁合金減速箱架	(210384)	FXX 鋁合金後齒箱	820040	MST 配重塊 10g	820058	可調式鋁合金擺臂座 (+1.5-+3.0)
210273	避震彈簧組 29mm (8)	(210340)	FXX 鋁合金馬達座組	210386	FXX 碳纖維前避震架 3.5	820041	MST 配重塊 30g	820059	擺臂座墊片0.2mm (10)

026074

Please add color remark for ( ) part number.
e.g. 210123R for Red (210123)
請增加顏色標示在 ( ) 編號
例: 210123R for 紅色 (210123)

Color 顏色	Remark 標示
Red 紅	R
Silver 銀	S